S/S by TM 11-5840-201-35
Library

TB 11-1167-2

DEPARTMENT OF THE ARMY TECHNICAL BULLETIN

Also for TM 11-5840-201-10

PRELIMINARY INSTRUCTIONS FOR RADAR SET AN/FPS–36 (MODIFIED RADIO SET AN/TPS–1D)

DEPARTMENT OF THE ARMY

APRIL 1957

TECHNICAL BULLETIN
No. 11–1167–2

DEPARTMENT OF THE ARMY
WASHINGTON 25, D. C., *4 April 1957*

PRELIMINARY INSTRUCTIONS FOR RADAR SET AN/FPS–36

(MODIFIED RADIO SET AN/TPS–1D)

		Paragraph	Page
CHAPTER 1.	INTRODUCTION AND DESCRIPTION		
Section I.	General		
	Introduction	1	3
	Scope	2	3
	Forms and records	3	3
II.	Description and Data		
	Purpose and use	4	4
	Technical characteristics	5	4
	Table of components	6	5
	Nomenclature assignments and common names	7	8
	Radar Set AN/FPS–36, description of equipment	8	8
	Description of Electrical Amplifier-Filter Assembly AM–1570/TPS–1D	9	11
	Description of Pulse Generator TD–169/TPS–1D	10	11
	Description of Antenna Control C–1894/FPS	11	11
	Description of Duplexer CU–548/TPS–1D	12	11
	Description of Directional Coupler CU–549/TPS–1D	13	12
	Description of other components	14	12
	Running spares	15	15
CHAPTER 2.	INSTALLATION		
Section I.	Service Upon Receipt of Equipment		
	Siting	16	16
	Unpacking new equipment	17	16
	Checking new equipment	18	16
II.	Installation		
	Installing Radar Set AN/FPS–36	19	17
	Cable chart	20	22
	Waveguide installation	21	22
	Trigger terminating resistors	22	22
III.	Initial Adjustment		
	General	23	23
	Performing initial adjustments	24	23
CHAPTER 3.	OPERATION		
Section I.	Controls and Instruments		
	General	25	24
	Controls and their uses	26	24
II.	Operation Under Usual Conditions		
	Starting and operating procedure	27	29
	Special operating notes	28	29

Paragraph Page

CHAPTER 3. OPERATION—Continued

III. Lubrication

Lubricating instructions 29 30
Parts lubricated by manufacturer that do not require subsequent lubrication 30 30

IV. Trouble Shooting at Organizational Maintenance Level

General 31 30
Specific trouble-shooting notes 32 30
Tube location drawings 33 32
Trouble sectionalization 34 34

CHAPTER 4. THEORY OF OPERATION

General 35 35
Block diagram of signal input circuit 36 35
Waveguide duplexer 37 35
Transmitter waveguide transition 38 37
Receiver waveguide transition 39 38
Directional coupler 40 38
Preselector 41 39
Signal mixer 42 40
IF preamplifier 43 41
Operation switching circuits 44 42
Pulse generator blocking oscillator 45 45
Pulse generator power supply 46 45
Circuitry added to Azimuth and Range Indicator IP–141/TPS–1D 47 47
Circuitry added to Azimuth and Range Indicator IP–345/TPS–1D 48 48
Power distribution and control 49 48

CHAPTER 5. TROUBLE SHOOTING AND REPAIR

Section I. General Information

General 50 50
Trouble-shooting steps 51 51

II. Trouble Shooting in Modified Radar Set

Reference data 52 52
System trouble-shooting hints 53 53
Adjustments to Radar Set AN/FPS–36 components 54 55
Adjustments to Azimuth and Range Indicator IP–406/FPS–36 ..... 55 58
Trouble shooting in pulse generator 56 58
Trouble shooting in if preamplifier 57 61
Replacement of parts 58 62

III. Final Testing

General 59 63
Final tests 60 63

CHAPTER 1

INTRODUCTION AND DESCRIPTION

SECTION I. GENERAL

1. Introduction. Radar Set AN/FPS–36 is a modified Radio Set AN/TPS–1D that has been modified with Electronic Equipment Modification Kit MK–304/TPS–1D. Instructions for modifying the equipment are outlined in a modification work order (MWO) accompanying the kit. The modification includes three new components, three modified components, and an entirely new antenna and antenna pedestal.

a. Antenna Group OA–1124/FPS. Antenna Group OA–1124/FPS (fig. 1) takes the place of the antenna and antenna base used in Radio Set AN–TPS/1D. Information pertaining to the antenna group is covered in TM 11–5047.

b. New Components. In addition to the components of Antenna Group OA–1124/FPS, three new components are supplied with the modification kit as components of Radar Set AN/FPS–36. These new components are Pulse Generator TD–169/TPS–1D, Electrical Amplifier-Filter Assembly AM–1570/TPS–1D, and Antenna Control C–1894/FPS. Description, installation, operation, theory and maintenance of these components are covered in this bulletin.

c. *Modified Components.* Radar Receiver-Transmitter RT–212/TPS–1D, Azimuth and Range Indicator IP–141/TPS–1D, and Azimuth and Range Indicator IP–345/TPS–1D are modified by the MWO and the nomenclature is changed to Radar Receiver-Transmitter RT–406/FPS–36, Azimuth and Range Indicator IP–405/FPS–36, and Azimuth and Range Indicator IP–406/FPS–36 respectively. The basic information on Radar Receiver-Transmitter RT–406/FPS–36 and Azimuth and Range Indicator IP–405/FPS–36 is covered in TM 11–1167. The Basic information on Azimuth and Range Indicator IP–406/FPS–36 is covered in TM 11–5112. The information pertaining to these components after they have been modified is covered in this bulletin.

d. Interconnections. The interconnections in Radar Set AN/FPS–36 are changed from those of Radio Set AN/TPS–1D because of the new components added and the rerouting of signal and power information. The information on cabling and interconnections is covered in this bulletin.

2. Scope. This bulletin contains the information and references necessary for the operation and maintenance of Radar Set AN/FPS–36. The user must be familiar with Radio Set AN/TPS–1D, Antenna Group OA–1124/FPS, and Azimuth and Range Indicator IP–345/TPS–1D. Radio Set AN/TPS–1D is covered in TM 11–1167, Antenna Group OA–1124/FPS is covered in TM 11–5047, and Azimuth and Range Indicator IP–345/TPS–1D is covered in TM 11–5112. This bulletin does not duplicate material from other publications except for clarification. The lists of components and technical characteristics are complete for Radar Set AN/FPS–36. The operation of Radar Set AN/FPS–36 is covered with references to other publications where operation unaffected by this modification is concerned. Only the theory of the new components and modified circuits of other components is covered in this bulletin. The maintenance of the new components and modified circuits is covered with references to other publications where necessary to make adjustments, alinements, and replacement of parts. Instructions contained in the MWO are necessary to convert Radio Set AN/TPS–1D into Radar Set AN/FPS–36 by use of Electronic Equipment Modification Kit MK–304/TPS–1D. Technical Manuals TM 11–1167, TM 11–5047, TM 11–5112, and TB 11–1167–2 are necessary for the proper operation and maintenance of Radar Set AN/FPS–36.

3. Forms and Records. *a. Unsatisfactory Equipment Reports.* Fill out and forward DA Form 468 (Unsatisfactory Equipment Report) to

Commanding Officer, U. S. Army Signal Equipment Support Agency, Fort Monmouth, N. J., as prescribed in AR 700–38.

b. Damaged or Improper Shipment. Fill out and forward DD Form 6 (Report of Damaged or Improper Shipment) as prescribed in AR 700–58 (Army) and Navy Shipping Guide, Article 1850–4 (Navy).

Section II. DESCRIPTION AND DATA

4. Purpose and Use. Radar Set AN/FPS–36 is a long range search set designed for fixed position operation at ranges up to 200 nautical miles (approx. 220 statute miles). The radar set is designed for use in the frequency range of 1,220 to 1,350 megacycles (mc).

a. Antenna Coverage. Antenna Group OA–1124/FPS is an L-band, horn fed, parabolic reflector type antenna used with Radar Set AN/FPS–36. The reflector provides azimuth coverage of 360° in continuous azimuth scanning with a vertical beam position 2.5° above the horizontal. The horizontal beam width is 1.4 ±.2°, and the vertical beam width is 6.2° ±.5°.

b. Display. Radar Set AN/FPS–36 contains a local indicator and a remote indicator. The local indicator has an A-scope and a plan position indicator (ppi) scope. The remote indicator, a ppi scope, reproduces the information presented on the ppi scope of the local indicator. There are five range scales on the ppi scopes (20, 40, 80, 160, and 200 miles) and five range scales on the A-scope (20, 40, 80, 160 miles, and EXP). The EXP presentation on the A-scope gives any 10-mile portion of the range from approximately 15 miles to 160 miles, using the entire face of the cathode-ray tube for this presentation.

c. Types of Operation. Radar Set AN/FPS–36 has two types of operation on the 20-, 40-, 80-, and 160-mile ranges the same as Radio Set AN/TPS–1D. These two types are normal and moving-target indicator (mti) operation. Only normal operation is available on the 200-mile range. Mti operation virtually eliminates the return from fixed distant targets and substantially reduces clutter from fixed close-in targets.

d. Identification Friend or Foe. Radar Set AN/FPS–36 has provisions for combination with identification friend or foe (iff) equipment, whereby aircraft are electronically interrogated to determine whether or not they are friendly. The iff antenna is located in the antenna horn and provisions are made for making the necessary connections for iff equipment. For details on operation and maintenance of the iff equipment, it is necessary to consult the publications covering the particular iff equipment used.

5. Technical Characteristics. *a. General.*

Range:	
Maximum	200 nautical miles.
Minimum	300 yards.
Accuracy	Within 3% of the range plus 1 nautical mile.
Antenna:	
Azimuth scanning	360° continuous clockwise at 6 rpm ± rpm.
Antenna gain	34 db along axis of maximum radiation.
Horizontal beam width	1.4° ±.2° at the half-power points.
Vertical beam width	6.2° ±.5° at the half-power points.
Reflector feed	Waveguide horn at the reflector focal point.
Vertical beam position	2.5° above the horizontal.
Iff reflector feed	Dipole radiator at the reflector focal point.
Iff horizontal beam width	1.6° ±.3° at the half-power points.
Iff vertical beam width	6.2° ±.5° at the half-power points.
Peak radio frequency power handling capacity	2 megawatts at .001 duty cycle.
Azimuth position synchros	24-speed, 400 cycle, type 31TX4; and 1-speed 60 cycle, type 5HG.
Rf input connection	L-band Waveguide Flange UG–418A/U.
Power requirements	120/208 volts ac ±5%, 60 cycles ±4%, 4 wire, 3 phase, 27 kilowatts. 115-volt ±5%, 400-cycle ±4%, single phase ac. 7.5 kilowatts (includes 5-kw system power and 2.5 kw heater power).
Weight of pedestal and reflector	8,300 pounds.
Antijamming	Antijamming circuit that limits width of echo pulse the receiver will pass.

b. Transmitting System.

Frequency	1,220 to 1,350 megacycles per second.

Wave length.....24.6 to 22.2 cm.
Peak power output.....500 kw.
Pulse repetition rate.....325 ±10 pulses per second on 200-mile range. 360 to 400 pulses per second on other ranges.
Pulse width.....2 microseconds.
Duty cycle.....001.
Source of RF power.....Magnetron (tube type 5J26).

c. Receiving System.

Receiver type.....Superheterodyne.
Local oscillator.....Lighthouse tube (type 2C40).
Intermediate frequency.....60 megacycles.
IF bandwidth.....1 megacycle.
Receiver noise figure.....11.7 db nominal.

d. Presentation System.

Local indicator:
Ppi.....Cathode-ray tube 7BP7A.
A scope.....Cathode-ray tube type 5CP1A.
Remote indicator.....Ppi, cathode-ray tube type 10WP7.

e. Heat Dissipation (Approx.).

Radar modulator.....800 watts.
Indicator.....150 watts.
Remote indicator.....160 watts.
Signal Comparator.....160 watts.
Power supply.....350 watts.
Receiver-transmitter.....1,300 watts.
Antenna group.....27 kw.

6. Table of Components. *a. Components of Radar Set AN/FPS–36.* Listed in the chart below are all the components of Radar Set AN/FPS–36. Some of these components are shipped as part of Antenna Group OA–1124/FPS and are covered in TM 11–5047; some are shipped as part of Modification Kit MK–304/TPS–1D and are covered in this technical bulletin; some are already in the field as part of Radio Set AN/TPS–1D and are covered in TM 11–1167 except for modifications incorporated by the MWO; one item, Azimuth and Range Indicator IP–345/TPS–1D (remote ppi) is covered in TM 11–5112 except for modifications incorporated by the MWO. Supplemental information covering the components of Radio Set AN/TPS–1D and Azimuth and Range Indicator IP–345/TPS–1D as modified by the MWO is covered in this bulletin. The remarks column of the following chart indicates where information other than that contained in this bulletin, on each of these components can be found.

Components	Remarks
Antenna Pedestal AB–465/FPS.	Component of Antenna Group OA–1124/FPS (TM 11–5047).
Antenna AS–847/FPS....	Component of Antenna Group OA–1124/FPS (TM 11–5047).
Electrical Power Cable Assembly CX–3909/U (52 ft).	Component of Antenna Group OA–1124/FPS (TM 11–5047).
Waveguide Assembly CG–1436/FPS–19 (two supplied).	Components of Antenna Group OA–1124/FPS (TM 11–5047).
Waveguide Assembly CG–1435/FPS–19 (two supplied).	Components of Antenna Group OA–1124/FPS (TM 11–5047).
Waveguide Assembly CG–1513/U (10 ft) (two supplied).	Components of Antenna Group OA–1124/FPS (TM 11–5047).
Waveguide Assembly CG–1512/U (3 ft).	Component of Antenna Group OA–1124/FPS (TM 11–5047).
Radio Frequency Cable Assembly CG–1514/U (11 ft).	Component of Antenna Group OA–1124/FPS (TM 11–5047).
Waveguide hardware and gasket group.	Component of Antenna Group OA–1124/FPS (TM 11–5047).
Radar Modulator MD–144/TPS–1D.	Component of Radio Set AN/TPS–1D and Radar Set AN/FPS–36.
Azimuth and Range Indicator IP–405/FPS–36.	Component of Radar Set AN/FPS–36.
Signal Comparator CM–36/TPS–1D.	Component of Radio Set AN/TPS–1D and Radar Set AN/FPS–36.
Power Supply PP–674/TPS–1D.	Component of Radio Set AN/TPS–1D and Radar Set AN/FPS–36.
Radar Receiver-Transmitter RT–406/FPS–36.	Component of Radar Set AN/FPS–36.
Electrical Amplifier-Filter Assembly AM–1570/TPS–1D.	Component of Electronic Equipment Modification Kit MK–304/TPS–1D; modification kit for Radar Receiver-Transmitter RT–212/TPS–1D.
Pulse Generator TD–169/TPS–1D.	Component of Electronic Equipment Modification Kit MK–304/TPS–1D.
Antenna Control C–1894/FPS.	Component of Electronic Equipment Modification Kit MK–304/TPS–1D; for attaching to Azimuth and Range Indicator IP–345/TPS–1D.
Radio Frequency Cable Assembly CG–1200/U (4 ft).	Component of Electronic Equipment Modification Kit MK–304/TPS–1D; miscellaneous and interconnecting materials.
Cord CG–92E/U (2 ft 1¼ in.).	Component of Electronic Equipment Modification Kit MK–304/TPS–1D; miscellaneous and interconnecting materials.

Components	Remarks
Electrical Power Cable Assembly CX–3910/U (50 ft).	Component of Electronic Equipment Modification Kit MK–304/TPS–1D; miscellaneous and interconnecting materials.
Electrical Power Cable Assembly CX–3911/U (6 ft).	Component of Electronic Equipment Modification Kit MK–304/TPS–1D; miscellaneous and interconnecting materials.
Electrical Power Cable Assembly CX–3912/U (50 ft).	Component of Electronic Equipment Modification Kit MK–304/TPS–1D; miscellaneous and interconnecting materials.
Radio Frequency Cable Assembly CG–1514/U (50 ft).	Component of Electronic Equipment Modification Kit MK–304/TPS–1D; miscellaneous and interconnecting materials.
Cord CG–247C/U (50 ft) (three supplied).	Components of Electronic Equipment Modification Kit MK–304/TPS–1D; miscellaneous and interconnecting materials.
Cord CG–247C/U (6 ft 1 in.).	Component of Electronic Equipment Modification Kit MK–304/TPS–1D; miscellaneous and interconnecting materials.
Electrical Power Cable Assembly CX–3913/U (52 ft).	Component of Electronic Equipment Modification Kit MK–304/TPS–1D; miscellaneous and interconnecting materials.
Electrical Power Cable Assembly CX–1999/U (6 ft 9 in.).	Component of Electronic Equipment Modification Kit MK–304/TPS–1D; miscellaneous and interconnecting materials.
Electrical Special Purpose Cable Assembly CX–3914/U (1 ft).	Component of Electronic Equipment Modification Kit MK–304/TPS–1D; modification kit for Radar Receiver-Transmitter RT–212/TPS–1D.
Duplexer CU–548/TPS–1D.	Component of Electronic Equipment Modification Kit MK–304/TPS–1D, modification kit for Radar Receiver-Transmitter RT–212/TPS–1D.
Waveguide, Flange UG–1225/TPS–1D.	Component of Electronic Equipment Modification Kit MK–304/TPS–1D; modification kit for Radar Receiver-Transmitter RT–212/TPS–1D.
Directional Coupler CU–549/TPS–1D.	Component of Electronic Equipment Modification Kit MK–304/TPS–1D; modification kit for Radar Receiver-Transmitter RT–212/TPS–1D.
Coaxial to Waveguide Adapter UG–1224/TPS–1D.	Component of Electronic Equipment Modification Kit MK–304/TPS–1D; modification kit for Radar Receiver-Transmitter RT–212/TPS–1D.
Coaxial to Waveguide Adapter UG–1223/TPS–1D.	Component of Electronic Equipment Modification Kit MK–304/TPS–1D; modification kit for Radar Receiver-Transmitter RT–212/TPS–1D.
Measuring rod assembly. .	Component of Antenna Group OA–1124/FPS (TM 11–5047).
Open-end wrench (1¾ in.).	Two supplied; special tools of Antenna Group OA–1124/FPS (TM 11–5047).
Azimuth and Range Indicator IP–406/FPS–36.	Component of Radar Set AN/FPS–36. This component is covered in TM 11–5112 except as modified by MWO 11–1167–9.

b. Components of Radar Set AN/FPS–36 Contained in Modification Kit. Listed below are components of Radar Set AN/FPS–36 that are shipped as part of Electronic Equipment Modification Kit MK–304/TPS–1D. Other components of Radar Set AN/FPS–36 are shipped separately or already exist in the field as part of other equipments. Subparagraphs *c*, *d*, and *e* below list other components of Radar Set AN/FPS–36 and their source.

Components	Reqd No.	Height (in.)	Depth (in.)	Length (in.)	Volume (cu ft)	Unit weight (lb)
Electrical Amplifier-Filter Assembly AM–1570/TPS–1D	1	17	12	11	1.1	11
Pulse Generator TD–169/TPS–1D	1	15–3/16	24	24	4.9	77
Antenna Control C–1894/FPS	1	5–5/16	2⅝	4–1/16	.035	4
Radio Frequency Cable Assembly CG–1200/U (4 ft)	.....	21/64	.....	48	.04	1.2
Cord CG–92E/U (1 ft 7⅛ in.)	.....	27/64 dia.	.....	19⅛	.014	.3
Electrical Power Cable Assembly CX–3910/U (50 ft)	.....	45/64	.....	600	.6	24
Electrical Power Cable Assembly CX–3911/U (6 ft)	.....	45/64	.....	72	.09	3.4

Components	Reqd No.	Height (in.)	Depth (in.)	Length (in.)	Volume (cu ft)	Unit weight (lb)
Electrical Power Cable Assembly CX–3912/U (50 ft)	.....	45/64	.....	600	.6	24
Radio Frequency Cable Assembly CG–1514/U (50 ft)	.....	35/64	.....	600	.5	21
Cord CG–247C/U (50 ft)	.....	11/32	.....	600	.3	14
Cord CG–247C/U (6 ft 1 in.)	.....	11/32	.....	72	.05	1.8
Electrical Power Cable Assembly CX–3913/U (52 ft)	.....	1–5/64	.....	624	1.2	60
Electrical Power Cable Assembly CX–1999/U (6 ft 9 in.)	.....	1¼	.....	81	.18	7.5
Special Purpose Electrical Cable Assembly CX–3914/U (1 ft)	.....	13/64	.....	12	.004	.6
Duplexer CU–548/TPS–1D	.....	25–45/64	11	11	.65	24
Waveguide Flange UG–1225/TPS–1D	1	2¼	7	2	.019	1.2
Directional Coupler CU–549/TPS–1D	1	6	11	11	.5	1.4
Coaxial to Waveguide Adapter UG–1224/TPS–1D	1	8–11/16	5–13/16	5	.14	1.5
Coaxial to Waveguide Adapter UG–1223/TPS–1D	1	5–3/16	8–11/16	12¾	.33	2.3

c. Components of Radar Set AN/FPS–36 Contained in Antenna Group OA–1124/FPS.

Components	Reqd No.	Height (in.)	Depth (in.)	Length (in.)	Volume (cu ft)	Unit weight (lb)
Antenna AS–847/FPS	1	194	205	480	11,040	1,322
Antenna Pedestal AB–465/FPS	1	99	111	94	597	7,420
Waveguide Assembly CG–1435/FPS–19 (90° H-bend, W514 and W515)	2	14¼	14¼	5½	.65	4.9
Waveguide Assembly CG–1436/FPS–19 (90° E-bend, W512 and W513)	2	11⅝	11⅝	8¾	.69	4.2
Waveguide Assembly CG–1512/U (3 ft) (flexible W511)	1	5½	8¾	36	1	16
Waveguide Assembly CG–1513/U (10 ft) (W516 and W517)	2	5½	8¾	120	3.3	22.2
Gasket for waveguide flange	8	3/16	4⅛	7⅜	.03	.1
Hexagonal nuts, nonmagnetic, corrosion-resistant, steel, 5/16–18	80	.....	.....	.....	.....	.....
Hexagonal cap screws, nonmagnetic, corrosion-resistant, steel, 5/16–18, 1⅛ inches long	80	.....	.....	.....	.....	.....
Spring lock washer, nonmagnetic, corrosion-resistant, steel, 5/16	80	.....	.....	.....	.....	.....
Electrical Power Cable Assembly CX–3909/U (52 ft)	1	1–5/16	1–5/16	624	.86	.....

d. Components of Radar Set AN/FPS–36 That Are Also Components of Radio Set AN/TPS–1D.

Components	Reqd No.	Length (in.)	Width (in.)	Height (in.)	Volume (cu ft)	Unit weight (lb)
Azimuth-Range Indicator IP–405/FPS–36 (Modified IP–141/TPS–1D)	1	24	24.25	29	9.76	213
Case CY–1139/UPM–30, containing— Radar Test Set AN/UPM–30 Echo Box TS–545/UP with accessories.	1	14.38	14.25	17	2.05	84
Accessories Case CY–1297/TPS–1D containing— Magnetron type 5J26. Coaxial adapter kit.	1	25	25	31	11.2	167
Power Supply PP–674/TPS–1D	1	24	24.25	29	9.76	242
Radar Modulator MD–144/TPS–1D	1	24	24.25	29	9.76	350
Radar Receiver-Transmitter RT–406/FPS–36 (Modified RT–212/TPS–1D)	1	24	24.25	29	9.76	335
Signal Comparator CM–36/TPS–1D including Pulse Delay Network MX–1207 MX–1207/TPS–1D	1	24	24.25	29	9.76	208

e. Components of Radar Set AN/FPS–36 Contained in Range and Azimuth Indicator IP–345/TPS–1D.

Components	Reqd No.	Length (in.)	Width (in.)	Height (in.)	Volume (cu ft)	Unit weight (lb)
Azimuth and Range Indicator IP–406/FPS–36 (Modified IP–345/TPS–1D)	1	17.25	28	17.75	5	93
Cord CG–247C/U (25 ft) (W1, W2, and W3)	3	300	.....	.3	.12	2.12
Electrical Power Cable Assembly CX–3704 (15 ft) (W5)	1	180	.....	.3	.065	1
Azimuth ring graduated at 50-mil intervals	1	9.8	.....	.25	.014	2
Viewing hood for 10 in. ppi	1	10.5	10.5	11.5	.28	1

7. Nomenclature Assignments and Common Names. A list of the nomenclature assignments for Radar Set AN/FPS–36 and Electronic Equipment Modification Kit MK–304/TPS–1D is given below. This list indicates a common name for the nomenclature items in these groups.

Nomenclature	Common name
Radar Modulator MD–144/TPS–1D.	Modulator.
Azimuth and Range Indicator IP–405/FPS–36.	Local indicator.
Azimuth and Range Indicator IP–406/FPS–36.	Remote ppi.
Signal Comparator CM–36/TPS–1D.	Signal comparator.
Power Supply PP–674/TPS–1D	Power supply.
Radar Receiver-Transmitter RT–406/FPS–36.	Receiver-transmitter.
Pulse Generator TD–169/TPS–1D.	Pulse generator.
Antenna Control C–1894/FPS	Antenna control.
Duplexer CU–548/TPS–1D	Waveguide duplexer.
Electrical Amplifier-Filter Assembly AM–1570/TPS–1D.	Preselector-amplifier.
Coaxial to Waveguide Adapter UG–1224/TPS–1D.	Receiver waveguide transition.
Coaxial to Waveguide Adapter UG–1223/TPS–1D.	Transmitter waveguide transition.
Waveguide Flange UG–1225/TPS–1D.	Waveguide section.
Directional Coupler CU–549/TPS–1D.	Directional coupler.
Radio Frequency Cable Assembly CG–1200/U (4 ft).	LO output cable.
Cord CG–92E/U (2 ft 1¼ in.)	Receiver input cable.
Electrical Power Cable Assembly CX–3910/U (50 ft).	Remote antenna control cable.
Electrical Power Cable Assembly CX–3912/U (50 ft).	Remote ppi cable.
Electrical Power Cable Assembly CX–3911/U (6 ft).	Preselector-amplifier power cable.
Radio Frequency Cable Assembly CG–1514/U (50 ft).	Iff RF cable.
Cord CG–247C/U (50 ft)	Remote ppi trigger cable.
Cord CG–247C/U (50 ft)	Remote ppi video cable.
Cord CG–247C/U (50 ft)	Remote ppi iff video cable.
Cord CG–247C/U (6 ft 1 in.)	Pulse generator trigger cable.
Electrical Power Cable Assembly CX–3913/U (52 ft).	40-foot antenna cable.
Electrical Power Cable Assembly CX–1999/U (6 ft 9 in.).	Local indicator cable.
Special Purpose Electrical Cable Assembly CX–3914/U (1 ft).	Keep-alive cable.
Waveguide Assembly CG–1436/FPS–19.	90° E-bend.
Waveguide Assembly CG–1435/FPS–19.	90° H-bend.
Waveguide Assembly CG–1512/U (3 ft).	Flexible waveguide.
Waveguide Assembly CG–1513/U (10 ft).	10-foot lengths of waveguide.
Electrical Power Cable Assembly CX–3909/U (52 ft).	Antenna power input cable.
Antenna Group OA–1124/FPS	40-foot antenna.
Antenna AS–847/FPS	40-foot reflector and horn-support assembly.

8. Radar Set AN/FPS–36, Description of Equipment. Radar Set AN/FPS–36 consists of three major groupings: the antenna group, the operating group, and the remote indicator. In addition to these three major groups, a suitable power unit (not supplied) or adequate commercial power and cables and waveguides (supplied with the equipment) are needed. These are necessary for interconnection of the various groups and interconnection of the various components within the groups.

a. Antenna Group. Antenna Group OA–1124/FPS (fig. 1) consists of Antenna AS–847/FPS, a large high-gain antenna for use with an L-band search radar set, and Antenna Pedestal AB–465/

FPS. A power input cable, and sufficient waveguide assemblies to connect the antenna up to 20 feet from the radar set also are supplied. Antenna Group OA–1124/FPS is covered in TM 11–5047.

(1) The antenna reflector and horn support assembly are bolted to the rotating column of the antenna pedestal. The reflector has a double-curved reflecting surface of expanded metal. The reflector is built in seven sections. A dipole located inside the antenna horn is used as an iff antenna when iff equipment is used in conjunction with the radar set.

(2) The antenna pedestal is the main support and driving assembly for the antenna reflector and its radio frequency (RF) feed system. A 20-horsepower motor and a speed-reducer gear box are attached to the motor and reducer base, which is, in turn, bolted to the main support base of welded structural steel I-beams. A pressure lubricating system provides lubricating oil for the main drive gear on the rotating assembly. All detail parts and the wiring system of the antenna pedestal are inclosed in a splashproof steel skin.

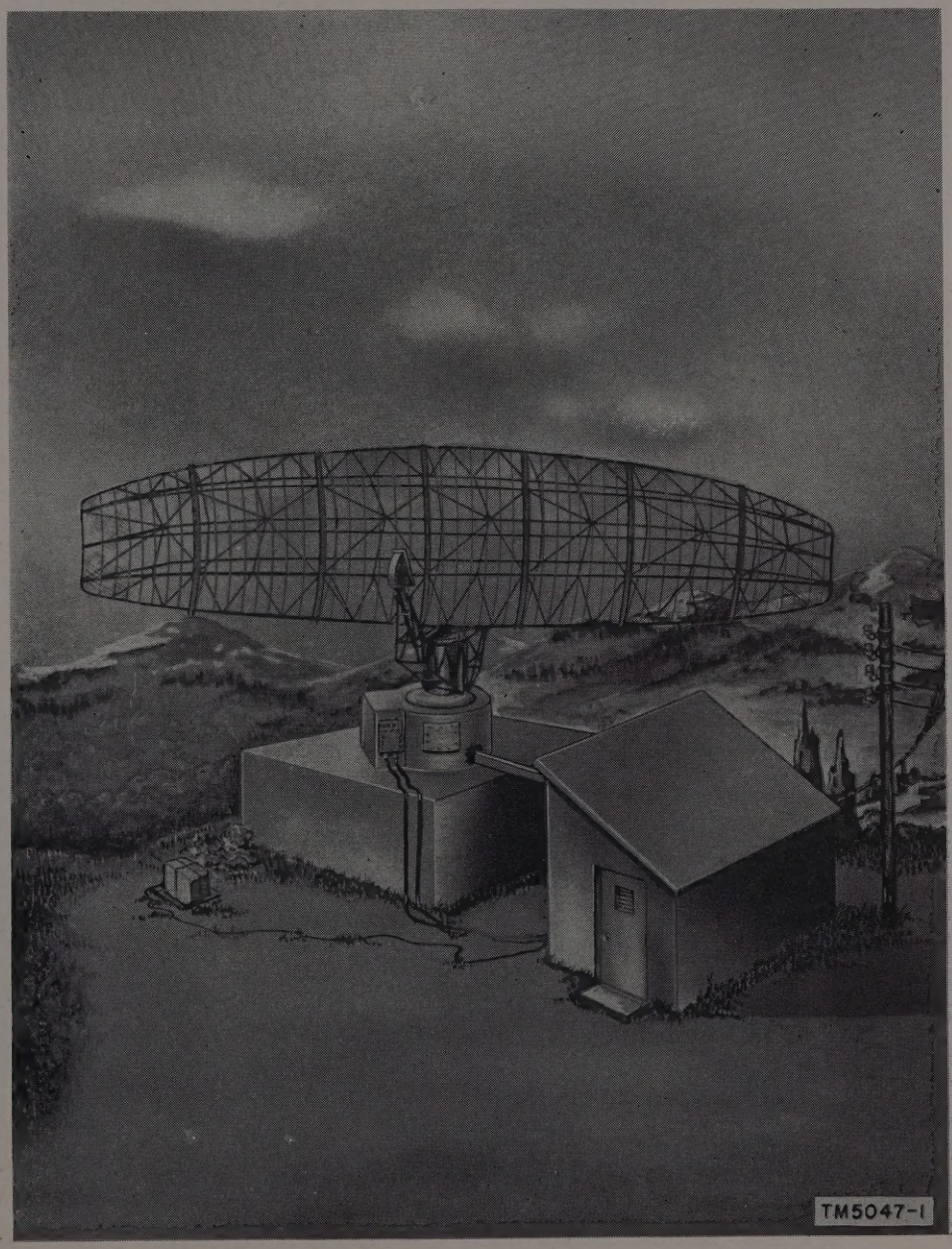

Figure 1. Antenna Group OA–1124/FPS as used with Radar Set AN/FPS–36.

b. Operating Group. The operating group consists of those components that are located at the operator's position. This includes the receiver-transmitter, signal comparator, power supply, antenna control, modulator, local indicator, pulse generator, and the preselector amplifier. These components can be stacked as shown in figure 7 or 8 or they may be located differently if conditions at the site make it necessary. If there is a change in the arrangement of the components, be sure that the cables are long enough for the desired arrangement. The majority of the components in the operating group are described in TM 11–1167, Radio Set AN/TPS–1D. Others are described in paragraphs 9 through 14.

c. Remote Indicator. Azimuth and Range Indicator IP–406/FPS–36 (fig. 10) (modified IP–345/TPS–1D) is the remote indicator for Radar Set

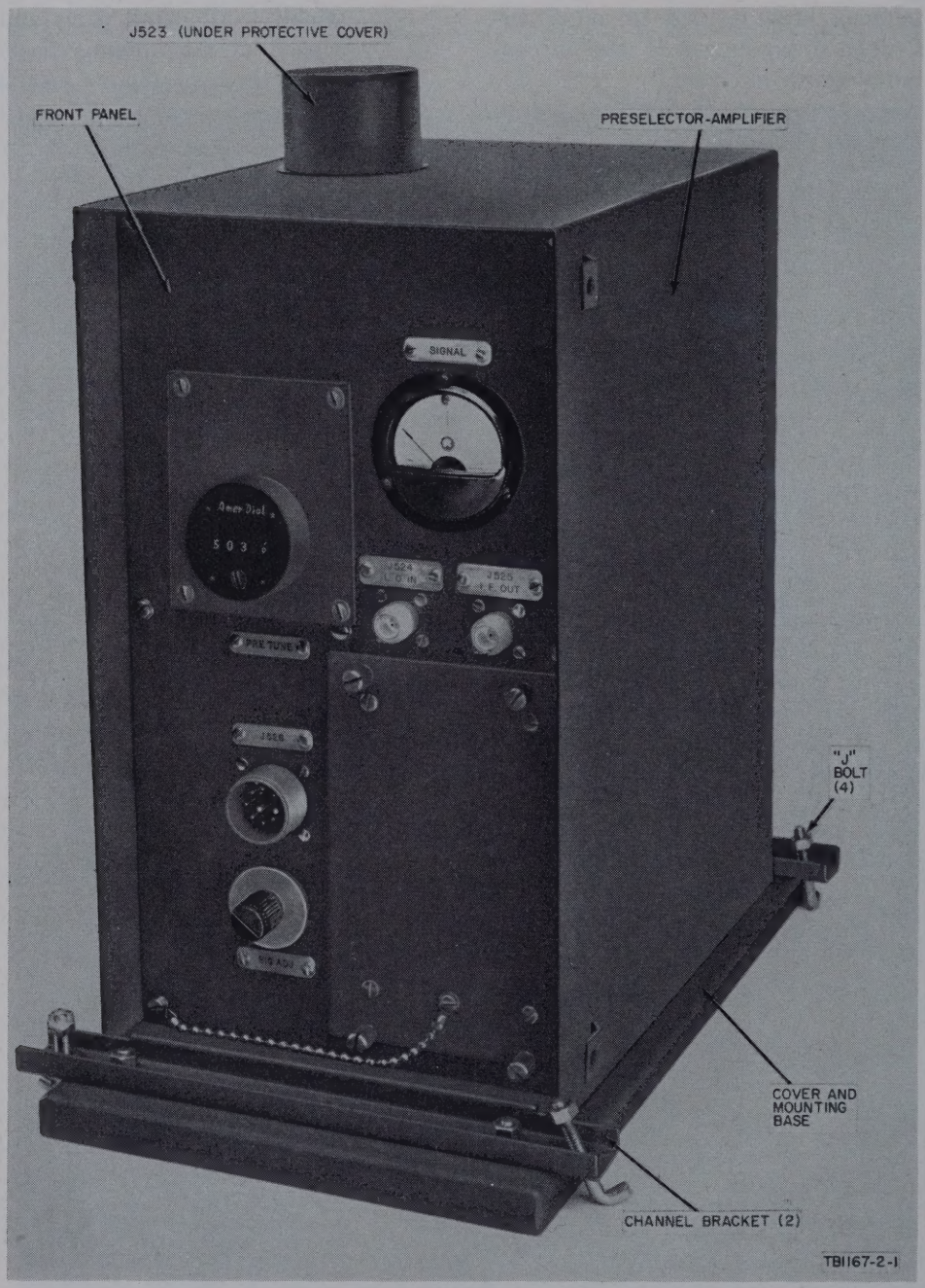

Figure 2. Electrical Amplifier-Filter Assembly AM–1570/TPS–1D.

AN/FPS–36. A VIDEO MTI-NORMAL switch has been added and an additional position for 200 miles has been added to the RANGE switch. Otherwise, the remote indicator is as described in TM 11–5112, Azimuth and Range Indicator IP–345/TPS–1D.

9. Description of Electrical Amplifier-filter Assembly AM–1570/TPS–1D. *a.* The preselector-amplifier (fig. 2) is furnished with Electronic Equipment Modification Kit MK–304/TPS–1D for use with Radar Set AN/FPS–36. This component improves the noise figure and image-rejection performance characteristics of Radar Set AN/FPS–36.

b. Parts of the preselector-amplifier are contained within a sprayproof case designed so that the cover and its attaching J-bolts can be used for a mounting base when installed in operating position.

c. The two operating controls are located in the front panel for convenience in operation. Jacks for the connection of external cables are on the front panel and the top of the component.

d. The preselector-amplifier is designed for mounting on the top of Radar Receiver-Transmitter RT–406/FPS–36.

10. Description of Pulse Generator TD–169/TPS–1D. *a.* Pulse Generator TD–169/TPS–1D (fig. 3) is furnished with Electronic Equipment Modification Kit MK–304/TPS–1D for use with Radar Set AN/FPS–36. This component contains circuits necessary for operating Radar Set AN/FPS–36 at a lower pulse repetition rate for obtaining extended range operation. Controls and circuitry for the remote control of the 40-foot antenna are also included in this component.

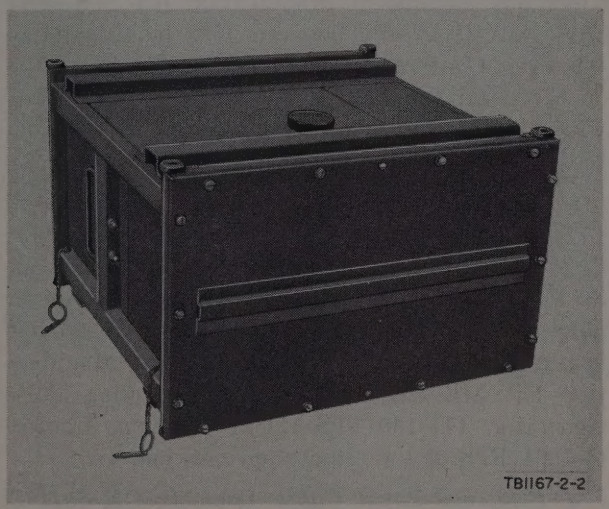

Figure 3. Pulse Generator TD–169/TPS–1D.

b. Parts and subassemblies of the pulse generator are mounted on a chassis-panel assembly that is inclosed in a sprayproof case having the same width and depth dimensions as the components of Radio Set AN/TPS–1D. The socket and pin arrangement is such that the pulse generator can be stacked on top of Signal Comparator CM–36/TPS–1D.

c. Controls, signals, and connectors for external cables are located on the front panel.

11. Description of Antenna Control C–1894/FPS. *a.* Antenna Control C–1894/FPS (fig. 4) is a small remote control unit furnished with Electronic Equipment Modification Kit MK–304/TPS–1D for use with the 40-foot antenna. This unit contains signal and warning lamps and a switch so that the antenna can be started, stopped, and checked for normal operating conditions at some remote position.

b. The antenna control includes a mounting plate that facilitates mounting the unit on Azimuth and Range Indicator IP–406/FPS–36.

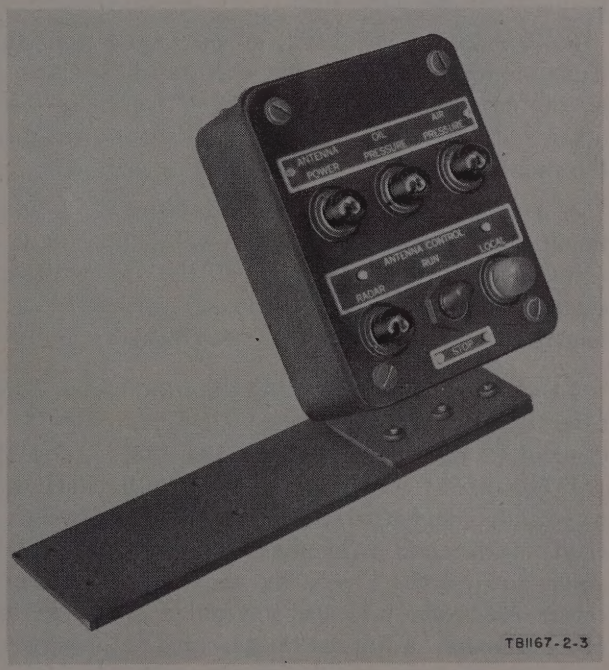

Figure 4. Antenna Control C–1894/FPS.

12. Description of Duplexer CU–548/TPS–1D. *a.* Duplexer CU–548/TPS–1D (fig. 5) is a broad-band waveguide duplexer that operates to

prevent RF power from entering the receiving system during the transmitter pulse period and the returned echo signals from being absorbed in the transmitter circuits during the receiving period. The duplexer contains one tr tube and two atr tubes coupled into a section of half-height waveguide. A coaxial-to-waveguide transition is used to couple the energy in from the magnetron. Another coaxial-to-waveguide transition couples the energy of the received signals out to the receiving system.

b. This duplexer is an aluminum alloy casting with a waveguide flange on one end and a choke flange on the other. Three flanges are positioned along its length for mounting two atr tubes and a tr tube. The duplexer, tr and atr tubes, and transitions are supported on four cast aluminum alloy brackets that are bolted to the front of Radar Receiver-Transmitter RT–406/FPS–36. The choke flange at the top of the assembly mates with the flange on the directional coupler.

13. Description of Directional Coupler CU–549/TPS–1D. *a.* Directional Coupler CU–549/TPS–1D (fig. 5) is a section of waveguide with a coupler for connecting an echo box or other radar performance test equipment.

b. The directional coupler contains a special flange on one end that mates with the choke flange on the duplexer and a UG–418A/U flange on the other end for connection to the waveguide run to the radar antenna.

c. A type N connector on the front of the directional coupler, can be used to couple out a 30-db (approx.) attenuated sample of the transmitted signal in the waveguide. The exact amount of attenuation is stamped on each directional coupler.

14. Description of Other Components. *a. Coaxial to Waveguide Adapter UG–1223/TPS–1D.* Coaxial to Waveguide Adapter UG–1223/TPS–1D (MT501, fig. 5) consists of a section of half-height waveguide coupled to a short section of 1⅝-inch rigid coaxial line. Coupling between the waveguide and coaxial line is by an extension of the center conductor into the waveguide acting as a probe antenna. A fin, centrally located in the waveguide, rigidly supports the center conductor. The transition is effectively a modified crossbar type that is designed for improved broad-band operation.

b. Waveguide Flange UG–1225/TPS–1D. Waveguide Flange UG–1225/TPS–1D W509 (fig. 5) is a short piece of half-height waveguide having a waveguide flange on each end. The waveguide flanges are made in one aluminum alloy casting. This short section of waveguide is used to couple transition MT501 to the duplexer.

c. Coaxial to Waveguide Adapter UG–1224/TPS–1D. Coaxial to Waveguide Adapter UG–1224/TPS–1D (TW501, fig. 5) is a section of waveguide containing a probe antenna connected to a type N coaxial connector. The probe antenna extends into the waveguide on a plane perpendicular to the width dimension and is rigidly supported by a cylinder of insulating material. The probe is located with respect to the blanked end of the waveguide for optimum energy transfer. The transition is used to conduct the returned echo signals from the waveguide duplexer to the input circuit of the receiving system.

d. Radio Frequency Cable Assembly CG–1200/U (4 ft). The LO output cable (W89, fig. 6) is a 4-foot length of 50-ohm coaxial cable terminated at each end with a type UG–18C/U plug connector. This cable is supplied with Electronic Equipment Modification Kit MK–304/TPS–1D to connect between J507 on the front panel of the receiver-transmitter and J524 on the front panel of the preselector-amplifier. It is used to transmit RF voltage from the local oscillator in the receiver-transmitter to the signal mixer circuit in the preselector-amplifier.

e. Cord CG–92E/U (2 ft 1¼ in.). The receiver input cable (W520, fig. 6) is a short piece of 50-ohm coaxial cable with a type UG–21D/U plug connector on each end. This cable is a component of Electronic Equipment Modification Kit MK–304/TPS–1D. It is used between J522 on Coaxial to Waveguide Adapter UG–1224/TPS–1D and J523 on Electrical Amplifier-Filter Assembly AM–1570/TPS–1D to conduct the RF received signal from the duplexer to the preselector-amplifier.

f. Electrical Power Cable Assembly CX–3910/U (50 ft). The remote antenna control cable (W82, fig. 6) is made up of a 50-foot length of nine-conductor cable fitted with suitable multiconductor plug connectors and adapter clamps. This cable is furnished with Electronic Equipment Modification Kit MK–304/TPS–1D for connecting Pulse Generator TD–169/TPS–1D to Antenna Control C–1894/FPS at the remote ppi position.

g. Electrical Power Cable Assembly CX–3911/U (6 ft). The preselector-amplifier power cable (W88,

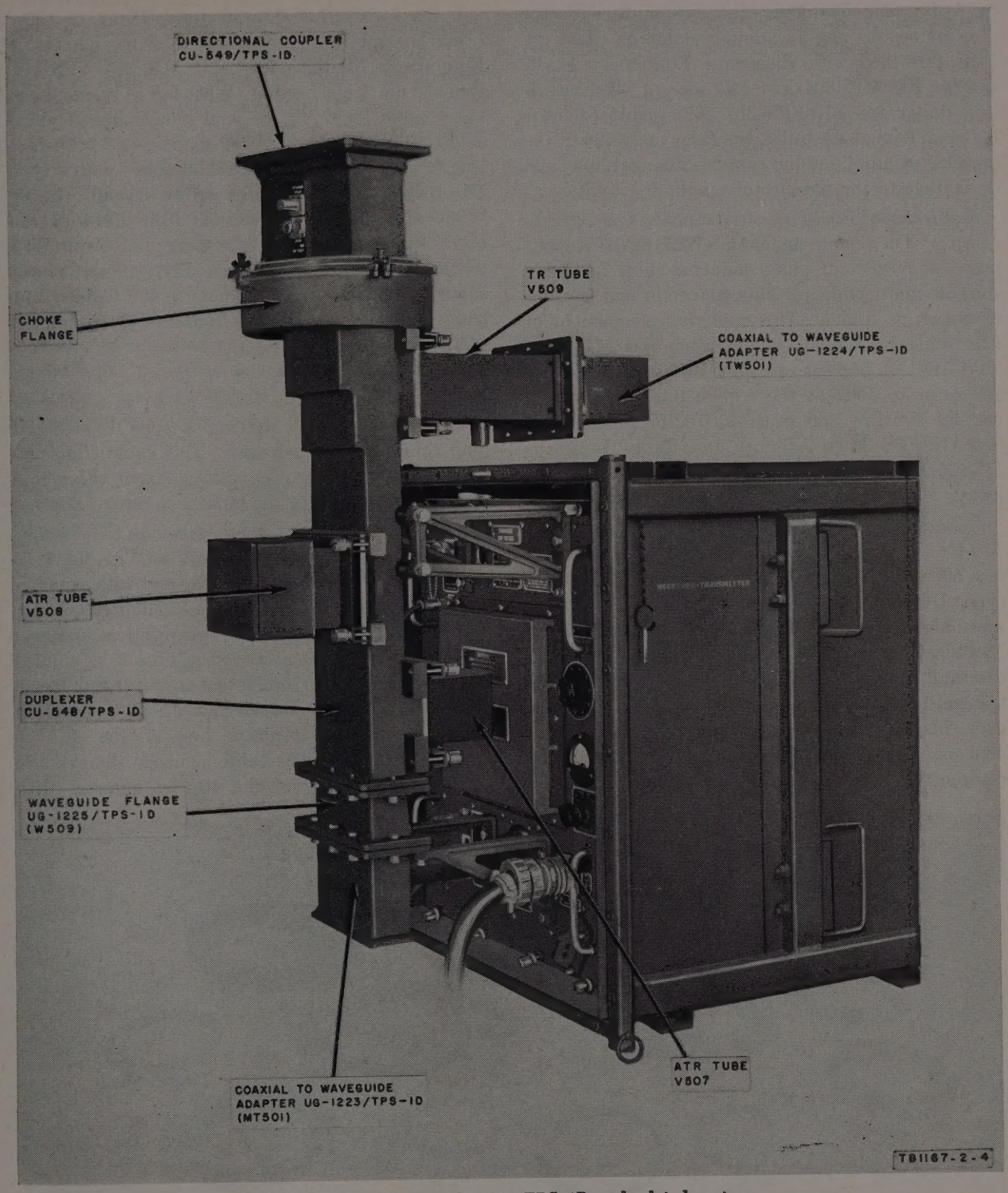

Figure 5. Duplexer CU–548/TPS–1D and related parts.

fig. 6) is a nine-conductor cable with multiconductor plug connectors and an adapter clamp on each end. It is furnished with Electronic Equipment Modification Kit MK–304/TPS–1D for use when installing Radar Set AN/FPS–36. This cable connects between J908 at the pulse generator and J526 at the preselector-amplifier and supplies filament, line, and dc voltage to the preselector-amplifier circuits.

h. Electrical Power Cable Assembly CX–3912/U (50 ft). The remote ppi cable (W85, fig. 6) is composed of 50-feet of nine-conductor cable having a suitable multiconductor plug connector and adapter clamp on each end. This cable is a component of Electronic Equipment Modification Kit MK–304/TPS–1D. It is used to connect J903 at the pulse generator to J602 at the remote ppi. Cable W85 couples synchro and control circuits from Radar Set AN/FPS–36 to Azimuth and Range Indicator IP–406/FPS–36 at a remote location up to 50 feet away.

i. Radio Frequency Cable Assembly CG–1514/U (50 ft). The iff RF cable (W90, fig. 6) is made up of a 50-foot length of 52-ohm coaxial cable and two type UG–494A/U plug connectors. This cable assembly is furnished with Electronic Equipment Modification Kit MK–304/TPS–1D for use with external iff equipment. RF energy from the iff transmitter and from the iff replies are transferred over this coaxial cable which is connected between J805 on the 40-foot antenna and the external iff equipment.

j. Cord CG–274C/U (50 ft). Three of these cable assemblies are furnished with Electronic Equipment Modification Kit MK–304/TPS–1D. Remote ppi trigger cable (W86, fig. 6), remote ppi video cable (W87, fig. 6), and remote ppi iff video cable (W91, fig. 6) are each made up of a 50-foot length of 76-ohm coaxial cable with type UG–18C/U plug connector on each end. Cable W86 transmits trigger voltage from J414 of the power supply to J603 of the remote ppi. Cable W87 transmits video signals from J417 at the power supply to J604 at the remote ppi. Cable W91 transmits iff video signals from the iff equipment to J605 at the remote ppi.

k. Cord CG–247C/U (6 ft 1 in.). The pulse generator trigger cable (W84, fig 6) is a piece of 76-ohm coaxial cable having a type UG–18B/U plug connector on each end. This cable transmits the radar system trigger voltage from the signal comparator (J302) to the pulse generator (J906).

l. Electrical Power Cable Assembly CG–3913/U (52 ft). The 40-foot antenna cable (W81, fig. 6) is a 15-conductor cable fitted on one end with a multiconductor plug connector and adapter clamp. Twenty-two inches of outer covering is stripped from the other end and a stuffing tube is assembled onto the cable. The conductors are arranged, laced, and marked for the proper connections to terminal boards in the distribution box of the 40-foot antenna pedestal. The cable connects the synchro and control circuits of the 40-foot antenna with

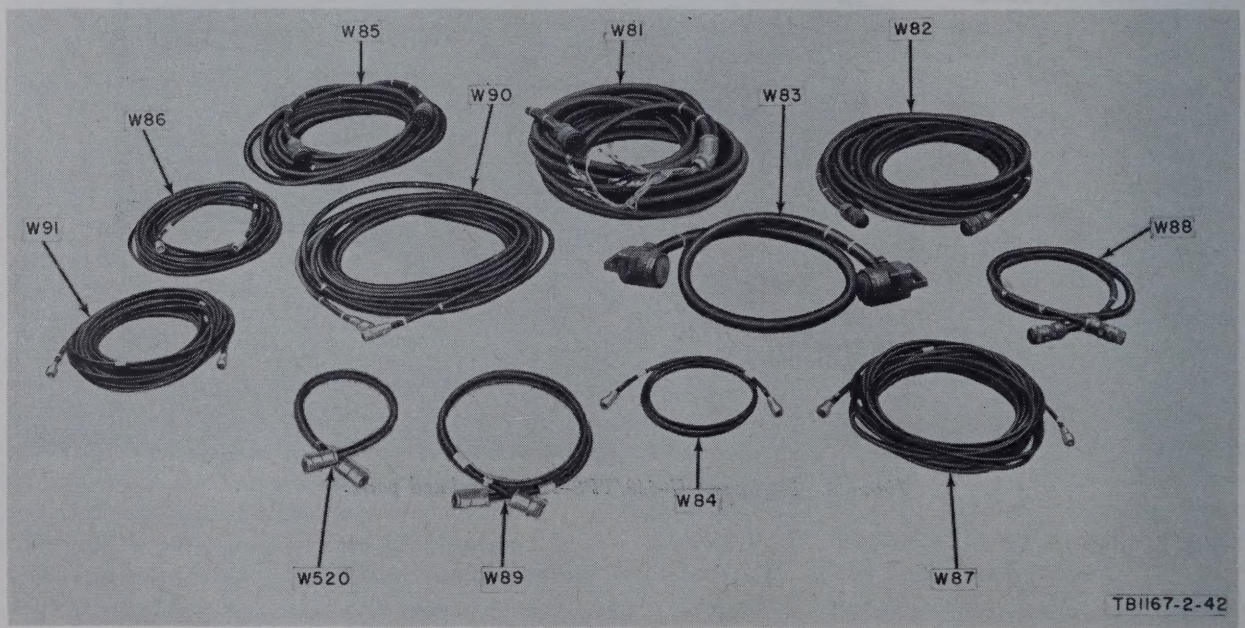

Figure 6. Cables used in Radar Set AN/FPS–36.

those of Radar Set AN/FPS–36. The plug connector connects to J901 at the pulse generator. This cable is furnished with Electronic Equipment Modification Kit MK–304/TPS–1D.

m. Electrical Power Cable Assembly CX–1999/U (6 ft 9 in.). The local indicator cable (W83, fig. 6), furnished with Electronic Equipment Modification Kit MK–304/TPS–1D, is a cable assembly made of a piece of 45-conductor cable terminated at each end with a type AK–G52–23CH–1¼ multiconductor plug connector. This cable is similar to cable W4 of Radio Set AN/TPS–1D except for the reference symbol designations. It connects between J905 on the pulse generator and J601 on Azimuth and Range Indicator IP–405/FPS–36 (local indicator) and transmits control, power supply, and synchro voltages.

n. Special Purpose Electrical Cable Assembly CX–3914/U (1 ft). The keep-alive cable (W521, fig. 11) is a two-conductor cable with one end terminated in a type AN3106A–16S–4P plug connector and the other end terminated in a tube contact clip and a solder terminal. This cable is furnished with Electronic Equipment Modification Kit MK–304/TPS–1D for use in connecting the keep-alive voltage jack (J527) at the receiver-transmitter to the keep-alive contact on tr tube V509.

15. Running Spares. The following is a list of running spares supplied with Antenna Group OA–1124/FPS and Electronic Equipment Modification Kit MK–304/TPS–1D. Running spares supplied with Radio Set AN/TPS–1D and Azimuth and Range Indicator IP–345/TPS–1D are listed in TM 11–1167 and TM 11–5112.

Quantity	Description
18	Fuse, cartridge 30 amp, 250 v.
6	Fuse, time-delay 2.0 amp, 250 v.
18	Fuse, time-delay 8.0 amp, 250 v.
6	Fuse, time-delay 10.0 amp, 250 v.
18	Fuse, time-delay 60 amp, 250 v.
4	Lamp, glow 1/25 watt.
1	Tube, electron type 6AU6WA.
1	Tube, electron type OB2.
1	Tube, electron type 5R4WGA.
1	Tube, electron type 5814A.
1	Tube, electron type 5654/6AK5W.
1	Tube, electron type 6080.
1	Tube, electron type 5842/417A.
2	Tube, electron type 6633 (BL–37).
4	Tube, electron type BL665.

CHAPTER 2

INSTALLATION

SECTION I. SERVICE UPON RECEIPT OF EQUIPMENT

16. Siting. *a.* Selection of sites for the installation of Radar Set AN/FPS–36 is determined largely by the needs of the operating organization. The considerations of height and surrounding terrain given in TM 11–1167 are also applicable to this radar set.

b. A suitably constructed reinforced concrete foundation is required for the installation of the 40-foot antenna (TM 11–5047). A weatherproof shelter is required for the installation of the components of the radar set. The shelter should be located so that the waveguide run between the radar set and the 40-foot antenna does not exceed 20 feet in length.

17. Unpacking New Equipment. *a.* Major components and all miscellaneous and installation materials for installing Radar Set AN/FPS–36 are supplied either with Radio Set AN/TPS–1D, Electronic Equipment Modification Kit MK–304/TPS–1D, Antenna Group OA–1124/FPS, or Azimuth and Range Indicator IP–345/TPS–1D (par. 6).

b. Instructions for unpacking Radio Set AN/TPS–1D are given in TM 11–1167. Instructions for unpacking Antenna Group OA–1124/FPS are given in TM 11–5047. Instructions for unpacking Azimuth and Range Indicator IP-345/TPS–1D are given in TM 11–5112.

c. Most of the components, assemblies, and parts of Electronic Equipment Modification Kit MK–304/TPS–1D are used in the performance of the modification procedure given in the MWO. Unpack the parts of the modification kits as they are used and be careful not to mislay any of the smaller parts. Components of the modification kits that are not mentioned in the modification procedure of the MWO should be unpacked at the time they are installed according to the instructions given in this chapter. Use standard precautions when unpacking to prevent damage to the equipment.

18. Checking Equipment. For the purpose of checking equipment, the table below gives the description and the contents of the packing cases of Electronic Equipment Modification Kit MK–304/TPS–1D and Antenna Group OA–1124. Lists are provided in TM 11–1167 for checking Radio Set AN/TPS–1D and in TM 11–5112 for checking Azimuth and Range Indicator IP–345/TPS–1D.

Case No.	Height (in.)	Width (in.)	Depth (in.)	Volume (cu ft)	Total weight (lb)	Contents
1	146	91	75	576.7	1,290	Reflector center section.
2	147	93	76	601.3	1,170	Right-hand reflector section No. 2.
3	147	93	76	601.3	1,170	Left-hand reflector section No. 2.
4	130	93	69	482.2	800	Right-hand reflector section No. 3.
5	130	93	69	482.2	800	Left-hand reflector section No. 3.
6	105	80	42	204.2	510	Right-hand reflector section No. 4.
7	105	80	42	204.2	510	Left-hand reflector section No. 4.
8	101	84	51	250.4	665	Reflector support.
9	162	68	45	286.9	695	Horn support assembly. Horn. Waveguide twist. Waveguide bend. Radio Frequency Cable Assembly CG–1514/U (11 ft). Measuring rod assembly.

Case No.	Height (in.)	Width (in.)	Depth (in.)	Volume (cu ft)	Total weight (lb)	Contents
10	107	113	95	664.7	8,790	Antenna Pedestal AB–465/FPS.
11	33	27	11	5.8	147	Waveguide gaskets (10).
						Hexagonal cap screws (80).
						Lock washers (80).
						Hexagonal nuts (80).
						Electrical Power Cable Assembly CX–3909/U (52 ft).
						Lubrication fitting (2).
						Electrical Power Cable Assembly CX–3913/U (52 ft).
						Electrical Power Cable Assembly CX–1999/U (6 ft 9 in.).
12	127	18	15	19.9	140	Waveguide Assembly CG–1513/U (10 ft).
13	25	18	16	4.2	40	Modification kit for Azimuth and Range Indicator IP–141/TPS–1D.
						Modification kit for Azimuth and Range Indicator IP–345/TPS–1D.
14	32	20	18	6.8	73	Modification kit for Radar Receiver Transmitter RT–212/TPS–1D.
15	42	33	26	20.1	230	Coaxial to Waveguide Adapter UG–1224/TPS–1D.
						Coaxial to Waveguide Adapter UG–1223/TPS–1D.
						Electrical Amplifier-Filter Assembly AM–1570/TPS–1D.
						Directional Coupler CU–549/TPS–1D.
						Special Purpose Electrical Cable CX–3914/U (1 ft).
						Duplexer CU–548/TPS–1D.
						Waveguide Flange UG–1225/TPS–1D.
						Atr tubes BL665 (2).
						Tr tube BL–37.
						Antenna Control C–1894/FPS.
						Open-end wrench (2).
						Drain hose.
						Waveguide Assembly CG–1512/U (3 ft).
						Waveguide Assembly CG–1436/FPS–19.
						Waveguide Assembly CG–1435/FPS–19.
						Telescope mount assembly.
						Radio Frequency Cable Assembly CG–1200/U (4 ft).
						Cord CG–92E/U (1 ft 7⅛ in.).
16	33	27	22	11.4	130	Pulse Generator TD–169/TPS–1D.
						Manuscript instruction book.
						Set of maintenance drawings.
17	31	23	20	8.6	102	Electrical Power Cable Assembly CX–3910/U (50 ft).
						Electrical Power Cable Assembly CX–3911/U (6 ft).
						Electrical Power Cable Assembly CX–3912/U (50 ft).
						Cord CG–247C/U (50 ft) (3).
						Cord CG–247C/U (6 ft 1 in.).
						Radio Frequency Cable Assembly CG–1514/U (50 ft).
						Cable marker band (6).
						Hardware group for mounting Antenna Control C–1894/FPS.
18	26	15	15	3.5	117	Can of oil for use with Antenna Pedestal AB–465/FPS (2, 5 gal each).
19	26	15	15	3.5	117	Can of oil for use with Antenna Pedestal AB–465/FPS (2, 5 gal each).
20	26	15	15	3.5	117	Can of oil for use with Antenna Pedestal AB–465/FPS (2, 5 gal each).

SECTION II. INSTALLATION

Note. Radar Set AN/FPS–36 is not assembled or installed in the normal manner because it is a modified set using some new components, discarding some old components, and modifying other components. The installation of Antenna Group OA–1124/FPS and the modification instructions contained in the MWO may be performed simultaneously or consecutively. The installation of the antenna group will depend on the site selected and the type of base to be used. Refer to the instructions in TM 11–5047 for installation of the antenna group. Refer to the MWO for instructions on modification of Radio Set AN/TPS–1D. After these two operations have been performed, follow the sequence of installation outlined in this section.

19. Installing Radar Set AN/FPS–36. *a.* Stack the pulse generator and the major components of Radio Set AN/FPS–36 in a suitable shelter. Anten-

na Base AB–221/TPS–1D is not used with this installation. Figures 7 and 8 show two alternate stacking schemes that may be used. For best results, the top of the shelter should be at least 4 feet 8 inches from the bottom of the antenna.

b. Attach the preselector-amplifier to the top of the modified receiver-transmitter as follows (figs. 2 and 9).

(1) Loosen the nuts on the four J-bolts and dismount the cover and mounting base from the preselector-amplifier case.

(2) Loosen and remove the four hexagonal nuts, lock washers, and flat washers and dismount the two channel brackets from the cover.

(3) Secure the preselector-amplifier case to the cover and mounting base; use the channel brackets as clamps. Fasten the channel brackets to the cover and mounting base with the four hexagonal screws, nuts, lock washers and flat washers. Tighten the four hexagonal nuts securely.

(4) Place the assembled preselector-amplifier and mounting base on the top of the receiver-transmitter at the left-hand side. Hook the J-bolts into the hat-channels using the holes drilled as instructed in the MWO. Securely tighten the hexagonal nuts on the J-bolts.

c. Attach Antenna Control C–1894/FPS to Azimuth and Range Indicator IP–406/FPS–36 and install the remote ppi at the desired remote site (TM 11–5112). To attach the antenna control to the remote ppi, proceed as follows (fig. 10):

(1) At the remote ppi, detach the chassis and case assembly from the mounting base.

(2) Bolt the antenna control mounting bracket to the mounting base with four 10–24 by $\frac{5}{8}$-inch long machine screws, flat washers, and lock washers. The mounting bracket can be mounted on either the right-hand or left-hand side of the remote ppi, depending on the requirements of the particular installation.

d. Connect the interconnecting cables between the various components of Radar Set AN/FPS–36. Refer to figures 11 and 46. Check the cable connections by referring to the cable chart (par. 20). The cables supplied with Radio Set AN/TPS–1D that are not listed in the chart are not used in this

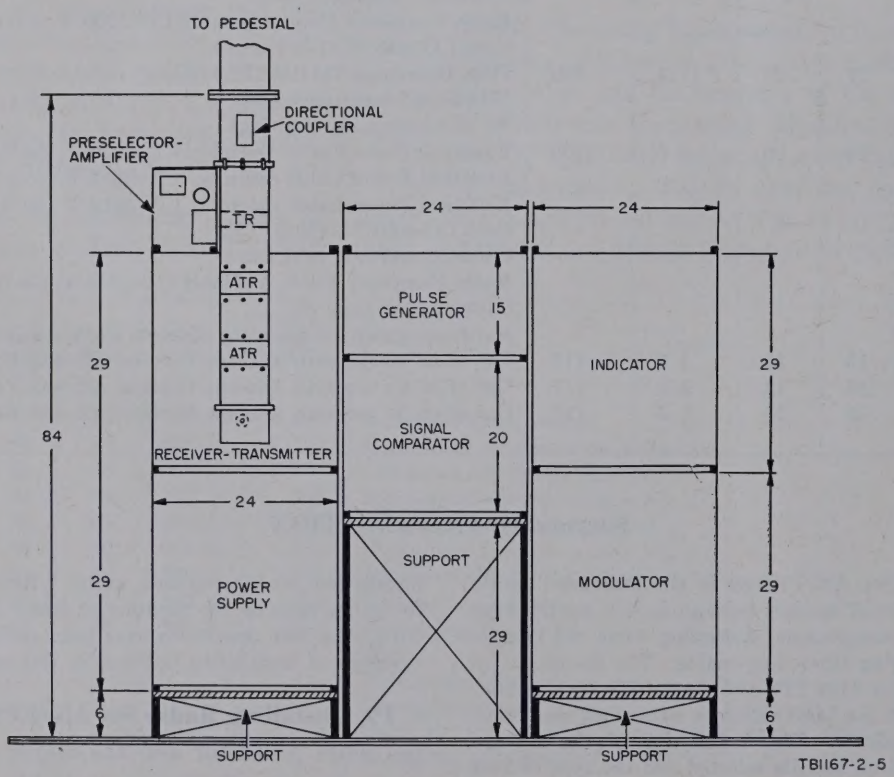

Figure 7. Recommended method for stacking units of Radar Set AN/FPS–36.

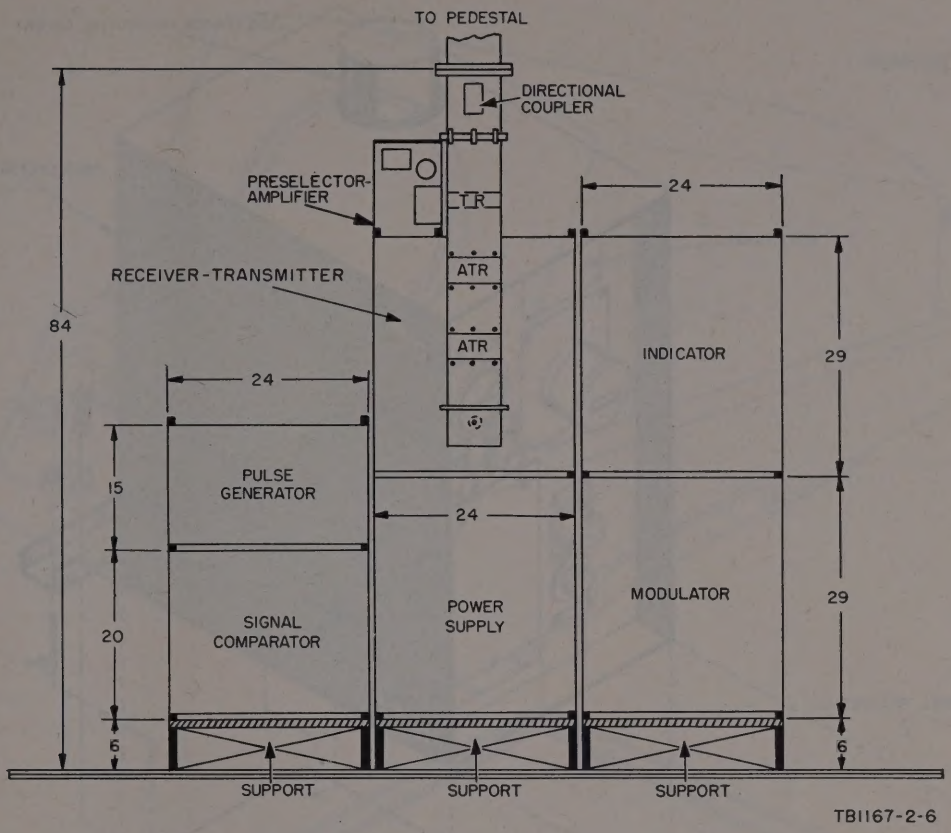

Figure 8. Alternate recommended method for stacking units of Radar Set AN/FPS–36.

installation. The cable reference designation W1, etc) is stamped on a cable marker band fastened around the cable.

(1) The following cables are furnished with Radio Set AN/TPS–1D and are used in this installation exactly as shown in TM 11–1167: W1, W2, W6, W7, W8, W9, W13, W14, W15, and W16.

(2) The following cables ((*a*) through (*c*) below) are furnished with Radio Set AN/TPS–1D and are altered according to directions given in the MWO. The physical alteration consists of removing and discarding the cable marker bands originally found on these cables and attaching new cable marker bands furnished with Electronic Equipment Modification Kit MK–304/TPS–1D. These cables perform the same functions as they do with Radio Set AN/TPS–1D but are connected between different components.

(*a*) W3A (W3, modified).

(*b*) W4B (W4A, modified).

(*c*) W5A (W5, modified).

(3) Power input cable W80 is furnished with Antenna Group OA–1124/FPS.

(4) Power cable W5, for the remote ppi, is furnished with Azimuth and Range Indicator IP–345/TPS–1D. Other cables supplied with Azimuth and Range Indicator IP–345/TPS–1D are not used in this type of installation.

(5) Cable W521 between KEEP-ALIVE J527 on the modified receiver-transmitter and tr tube V510 is furnished with the modification kit for Radar Receiver-Transmitter RT–212/TPS–1D.

(6) All other cables shown on figure 9 and listed in the chart are furnished with the miscellaneous and installation materials of Electronic Equipment Modification Kit MK–304/TPS–1D.

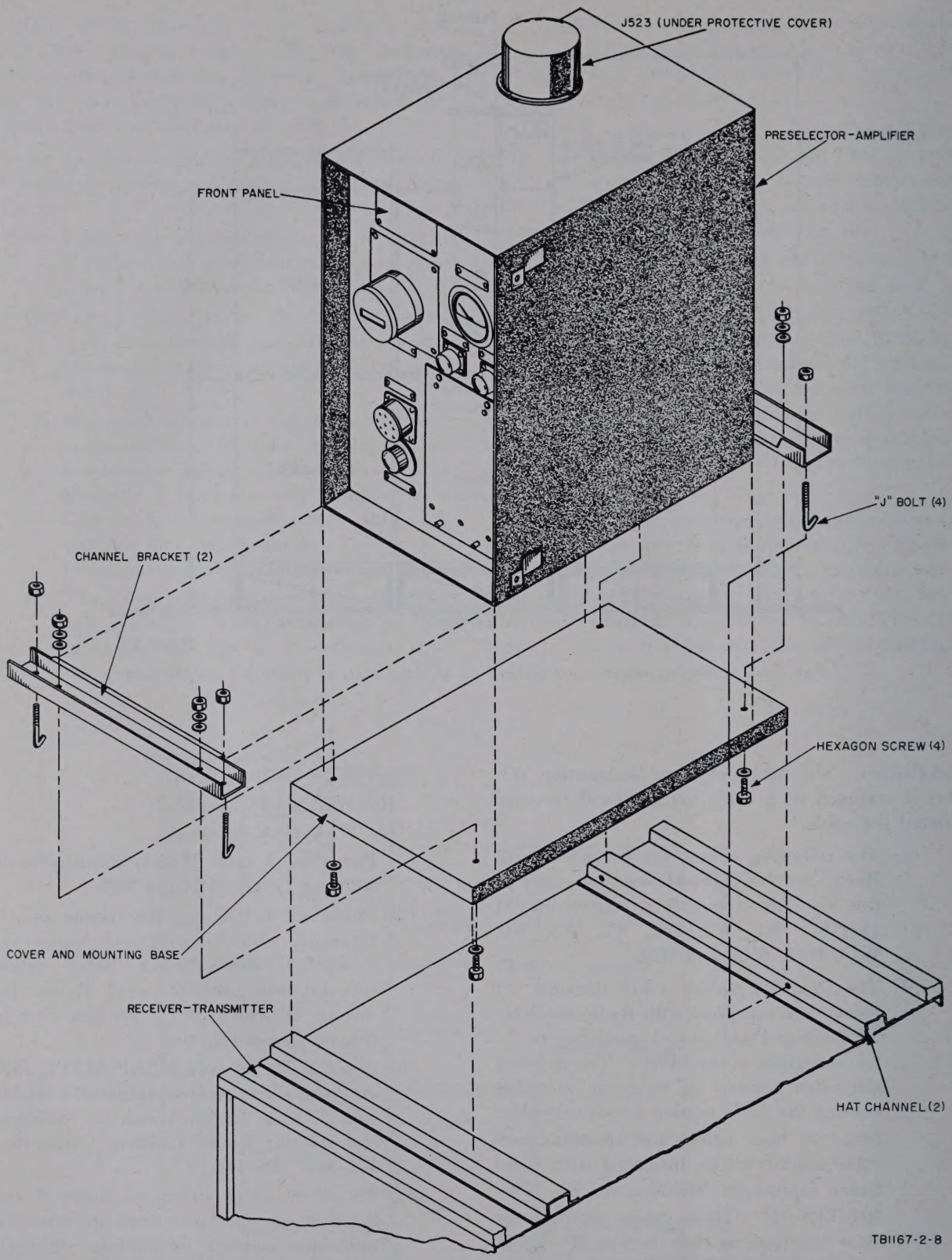

Figure 9. Electrical Amplifier-Filter Assembly AM–1570/TPS–1D, installation drawing.

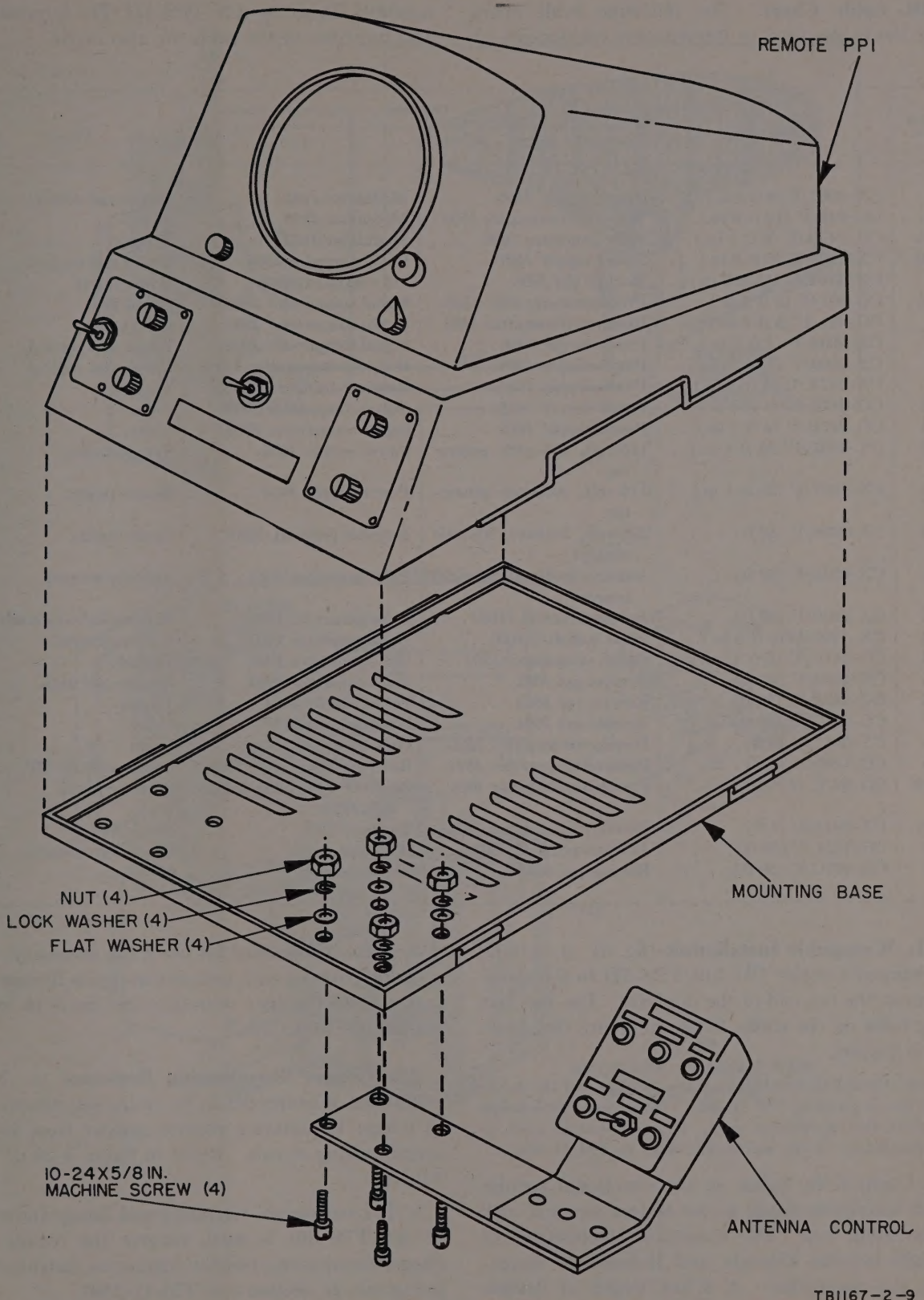

Figure 10. Antenna Control C–1894/FPS, installation drawing.

20. Cable Chart. The following cable chart lists the cables used to interconnect components of modified Radio Set AN/TPS–1D. The terminations and functions of the cable are also listed.

Cable No.	Nomenclature	Connects		Purpose
		From	To	
W1	CX–2002/U (9 ft 3 in.)	Power supply J406	Modulator J151	Power and control.
W2	CG–948/U (12 ft 6 in.)	Receiver-transmitter J505	Modulator J155	Pulse.
W3A	CG–247B/U (6 ft 1 in.)	Pulse generator J907	Modulator J152	Trigger.
W4B	CX–1999/U (6 ft 9 in.)	Power supply J407	Pulse generator J904	Power and control.
W5	CX–3704/U (15 ft 0 in.)	Remote ppi J606	115 v 60 cy supply	Power input.
W5A	CG–901/U (5 ft 9 in.)	Preselector-amplifier J525	Signal comparator J306	Signal IF.
W6	CG–901/U (5 ft 9 in.)	Receiver-transmitter J503	Signal comparator J304	Coho syn.
W7	CX–2001/U (3 ft 7 in.)	Power supply J401	Signal comparator J301	Power and control.
W8	CX–2000/U (7 ft 9 in.)	Power supply J408	Receiver-transmitter J508	Power and control.
W9	CX–247A/U (5 ft 3 in.)	Power supply J416	Receiver-transmitter J506	Trigger.
W13	CG–247B/U (4 ft 1 in.)	Power supply J413	Signal comparator J305	Video.
W14	CG–247B/U (4 ft 1 in.)	Power supply J415	Signal comparator J303	Video.
W15	CX–1997/U (50 ft 1 in.)	115-volt, 400-cycle generator.	Power supply J405	System power.
W16	CX–1997/U (50 ft 1 in.)	115-volt, 400-cycle generator.	Power supply J404	Heater power.
W80	CX–3909/U (52 ft)	208-volt, 3-phase, 60-cycle supply.	Antenna pedestal, K801	Power input.
W81	CX–3913/U (52 ft)	Antenna pedestal terminal boards.	Pulse generator J901	Antenna control.
W82	CX–3910/U (50 ft)	Antenna control J1001	Pulse generator J902	Remote antenna control.
W83	CX–1999/U (6 ft 9 in.)	Local indicator J601	Pulse generator J905	System control.
W84	CG–247C/U (6 ft 1 in.)	Signal comparator J302	Pulse generator J906	Trigger.
W85	CX–3912/U (50 ft)	Remote ppi J602	Pulse generator J903	Remote ppi data.
W86	CG–247C/U (50 ft)	Remote ppi J603	Power supply J414	Trigger.
W87	CG–247C/U (50 ft)	Remote ppi J604	Power supply J419	Video.
W88	CX–3911/U (6 ft)	Preselector-amplifier J526	Pulse generator J908	Power.
W89	CG–1200/U (4 ft)	Preselector-amplifier J524	Receiver-transmitter J507	Local oscillator RF.
W520	CG–92/U (2 ft 1¼ in.)	Preselector-amplifier J523	Receiver waveguide transition J522.	Receiver input.
W521	CX–3914/U (1 ft)	Receiver-transmitter J527	Tr tube V510	Keep-alive.
W90	CG–1514/U (50 ft)	Antenna pedestal J805	Iff equipment	Iff radio frequency.
W91	CG–247C/U (50 ft)	Remote ppi J605	Iff equipment	Iff video.

21. Waveguide Installation (fig. 5). *a.* Attach Directional Coupler CU–549/TPS–1D to the choke flange at the top end of the duplexer. Use the four wing bolts on the choke flange to secure the directional coupler.

Note. Complete installation of the antenna and the waveguide run is given in TM 11–5047. Instructions in *b* below are given for convenience only. If any questions arise on the installation of the waveguide, refer to TM 11–5047.

b. Connect the flange on the directional coupler to the waveguide flange on the 40-foot antenna with a waveguide run. Use a suitable combination of straight lengths, E-bends, and H-bends to accomplish the connection. A 3-foot length of flexible waveguide is furnished for use when necessary. Use a gasket between each pair of waveguide flanges and fasten them together securely with the 5/16 by 18 cap screws furnished.

22. Trigger Terminating Resistors. *a.* If iff equipment is connected to the radar set, remove the iff trigger terminating resistor jumper from the iff synchronizing circuit. Refer to figure 3–20 of TM 11–1167.

b. If a remote ppi (Azimuth and Range Indicator IP–406/FPS–36) is used, remove the remote ppi trigger terminating resistor jumper as instructed in paragraph 2*e*, section 3 of TM 11–1167.

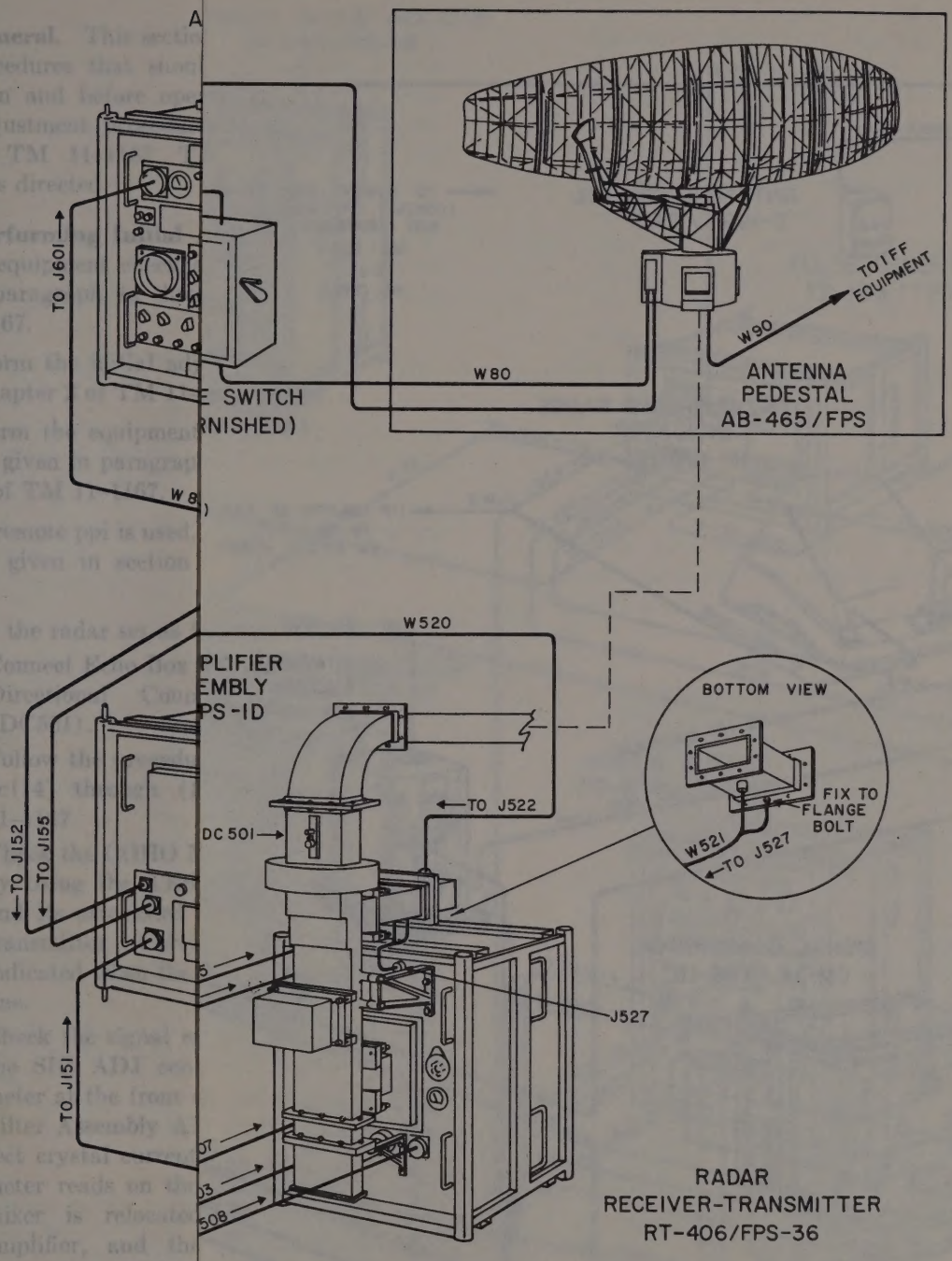
TO J601
W80
TO IFF EQUIPMENT
W90
ANTENNA PEDESTAL AB-465/FPS
W520
TO J522
DC 501
TO J152
TO J155
TO J151
J527
BOTTOM VIEW
FIX TO FLANGE BOLT
W521
TO J527
RADAR RECEIVER-TRANSMITTER RT-406/FPS-36

TB1167-2-7

20. Cable Chart. The following cable chart lists the cables used to interconnect components of modified Radio Set AN/TPS–1D. The terminations and functions of the cable are also listed.

Cable No.	Nomenclature	Connects		Purpose
		From	To	
W1	CX–2002/U (9 ft 3 in.)	Power supply J406	Modulator J151	Power and control.
W2	CG–948/U (12 ft 6 in.)	Receiver-transmitter J505	Modulator J155	Pulse.
W3A	CG–247B/U (6 ft 1 in.)	Pulse generator J907	Modulator J152	Trigger.
W4B	CX–1999/U (6 ft 9 in.)	Power supply J407	Pulse generator J904	Power and control.
W5	CX–3704/U (15 ft 0 in.)	Remote ppi J606	115 v 60 cy supply	Power input.
W5A	CG–901/U (5 ft 9 in.)	Preselector-amplifier J525	Signal comparator J306	Signal IF.
W6	CG–901/U (5 ft 9 in.)	Receiver-transmitter J503	Signal comparator J304	Coho syn.
W7	CX–2001/U (3 ft 7 in.)	Power supply J401	Signal comparator J301	Power and control.
W8	CX–2000/U (7 ft 9 in.)	Power supply J408	Receiver-transmitter J508	Power and control.
W9	CX–247A/U (5 ft 3 in.)	Power supply J416	Receiver-transmitter J506	Trigger.
W13	CG–247B/U (4 ft 1 in.)	Power supply J413	Signal comparator J305	Video.
W14	CG–247B/U (4 ft 1 in.)	Power supply J415	Signal comparator J303	Video.
W15	CX–1997/U (50 ft 1 in.)	115-volt, 400-cycle generator.	Power supply J405	System power.
W16	CX–1997/U (50 ft 1 in.)	115-volt, 400-cycle generator.	Power supply J404	Heater power.
W80	CX–3909/U (52 ft)	208-volt, 3-phase, 60-cycle supply.	Antenna pedestal, K801	Power input.
W81	CX–3913/U (52 ft)	Antenna pedestal terminal boards.	Pulse generator J901	Antenna control.
W82	CX–3910/U (50 ft)	Antenna control J1001	Pulse generator J902	Remote antenna control.
W83	CX–1999/U (6 ft 9 in.)	Local indicator J601	Pulse generator J905	System control.
W84	CG–247C/U (6 ft 1 in.)	Signal comparator J302	Pulse generator J906	Trigger.
W85	CX–3912/U (50 ft)	Remote ppi J602	Pulse generator J903	Remote ppi data.
W86	CG–247C/U (50 ft)	Remote ppi J603	Power supply J414	Trigger.
W87	CG–247C/U (50 ft)	Remote ppi J604	Power supply J419	Video.
W88	CX–3911/U (6 ft)	Preselector-amplifier J526	Pulse generator J908	Power.
W89	CG–1200/U (4 ft)	Preselector-amplifier J524	Receiver-transmitter J507	Local oscillator RF.
W520	CG–92/U (2 ft 1¼ in.)	Preselector-amplifier J523	Receiver waveguide transition J522.	Receiver input.
W521	CX–3914/U (1 ft)	Receiver-transmitter J527	Tr tube V510	Keep-alive.
W90	CG–1514/U (50 ft)	Antenna pedestal J805	Iff equipment	Iff radio frequency.
W91	CG–247C/U (50 ft)	Remote ppi J605	Iff equipment	Iff video.

21. Waveguide Installation (fig. 5). *a.* Attach Directional Coupler CU–549/TPS–1D to the choke flange at the top end of the duplexer. Use the four wing bolts on the choke flange to secure the directional coupler.

Note. Complete installation of the antenna and the waveguide run is given in TM 11–5047. Instructions in *b* below are given for convenience only. If any questions arise on the installation of the waveguide, refer to TM 11–5047.

b. Connect the flange on the directional coupler to the waveguide flange on the 40-foot antenna with a waveguide run. Use a suitable combination of straight lengths, E-bends, and H-bends to accomplish the connection. A 3-foot length of flexible waveguide is furnished for use when necessary. Use a gasket between each pair of waveguide flanges and fasten them together securely with the 5/16 by 18 cap screws furnished.

22. Trigger Terminating Resistors. *a.* If iff equipment is connected to the radar set, remove the iff trigger terminating resistor jumper from the iff synchronizing circuit. Refer to figure 3–20 of TM 11–1167.

b. If a remote ppi (Azimuth and Range Indicator IP–406/FPS–36) is used, remove the remote ppi trigger terminating resistor jumper as instructed in paragraph 2*e*, section 3 of TM 11–1167.

AZIMUTH-RANGE INDICATOR
IP-405/FPS-36

TO J901 ← W81

W82 TO J1001 →

ANTENNA CONTROL
C-1894 / FPS

← TO POWER LINES
(CONDUIT OR CABLE
NOT FURNISHED)
120-208 V
3 ϕ
60 CYCLE

TO J601 ↑

PULSE GENERATOR
TD-169 / TPS-ID

FUSED LINE SWITCH
(NOT FURNISHED)

TO IFF EQUIPMENT

W90

W80

ANTENNA
PEDESTAL
AB-465/FPS

TO J907
TO J904
TO J906
TO J908
TO J905
W3A
W83

AZIMUTH AND RANGE
INDICATOR
IP-406/FPS-36

W5 → (IP-406/FPS-36 CABLE)
TO 115 VOLT
60 CYCLE POWER

TO J603
TO J604
TO J602
TO J605
TO J606
W85
W86
W91

TO J902
TO J903

W2
W88
W84

TO IFF EQUIPMENT

TO J526

RADAR MODULATOR
MD-144 / TPS-ID

POWER SUPPLY
PP-674 / TPS-ID

← TO J523
W520

ELECTRICAL AMPLIFIER
FILTER ASSEMBLY
AM-1570 / TPS-ID

BOTTOM VIEW
FIX TO FLANGE BOLT
W521
TO J527

← TO J522
DC 501

← TO J152
← TO J155

W48
W87

TO J416
TO J404
TO J415
TO J413
TO J407
TO J401
TO J419
TO J414

SIGNAL COMPARATOR
CM-36 / TPS-ID

TO J301
TO J302
TO J304
TO J305
TO J303
TO J306

TO J524 ↑
TO J525 ↓
W89

TO J505
TO J506
J527
TO J507
TO J503
TO J508

RADAR
RECEIVER-TRANSMITTER
RT-406/FPS-36

TO J151 ↑
W1
TO J406 →
TO J405 ↑
W13
W14
W9
W7
← TO J408
W5A (TPS-ID CABLE)
W8
W6

POWER INPUT
FOR HEATERS
115 VOLT 400 CYCLE
W16

POWER INPUT
115 VOLT 400 CYCLE
W15

TB1167-2-7

Figure 11. Pictorial cabling diagram. Radar Set AN/FPS-36.

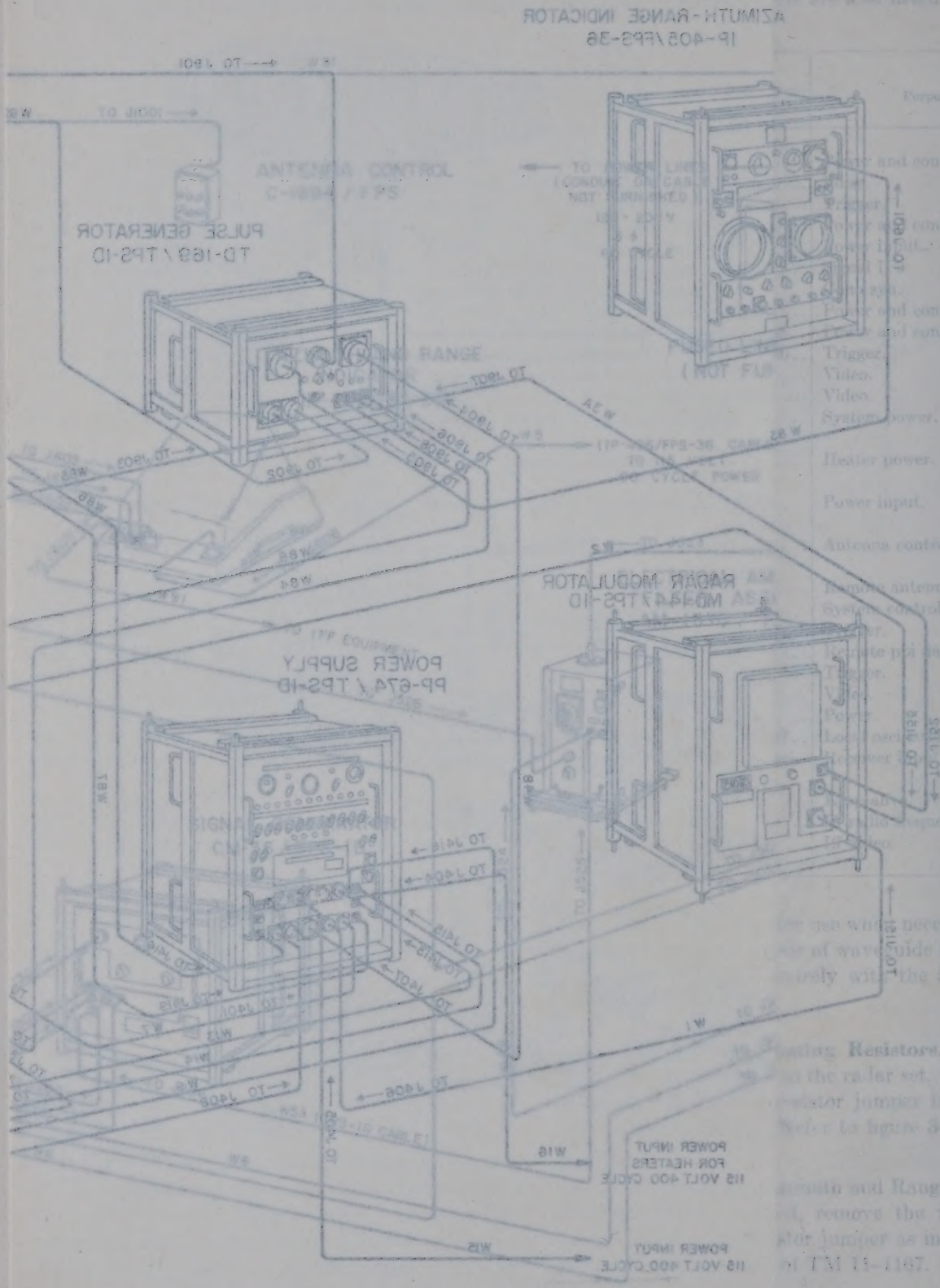
AZIMUTH-RANGE INDICATOR
IP-405/FPS-36
PULSE GENERATOR
TD-169/TPS-ID
POWER SUPPLY
PP-674/TPS-ID
RADAR MODULATOR
MD-144/TPS-ID
POWER INPUT
FOR HEATERS
115 VOLT 400 CYCLE
POWER INPUT
115 VOLT 400 CYCLE

23. General. This section covers initial adjustment procedures that should be performed after installation and before operation. Perform these initial adjustment procedures in the order given. Refer to TM 11–1167, TM 11–5112, and TM 11–5047 as directed.

24. Performing Initial Adjustments. *a.* Perform the equipment check and initial adjustments given in paragraph 4*a* through *c*(5), section 3 in TM 11–1167.

b. Perform the initial adjustments given in section II, chapter 2 of TM 11–5047.

c. Perform the equipment check and initial adjustments given in paragraphs 4*c*(7) through (12), section 3 of TM 11–1167.

d. If a remote ppi is used, perform the initial adjustments given in section II, chapter 2 of TM 11–5112.

e. Tune the radar set as follows:

(1) Connect Echo Box TS–172/UP to J533 on Directional Coupler CU–549/TPS–1D (DC501).

(2) Follow the procedure given in paragraphs 4*c*(14) through (16), section 3 of TM 11–1167.

(3) Check the COHO MIXER crystal current by using the TEST SELECTOR switch and its associated meter at the receiver-transmitter. Correct crystal current is indicated when the meter reads on the red line.

(4) Check the signal crystal current by using the SIG ADJ control and the SIGNAL meter at the front of Electrical Amplifier-Filter Assembly AM–1570/TPS–1D. Correct crystal current is indicated when the meter reads on the red line. The signal mixer is relocated in the preselector-amplifier, and the TEST SELECTOR switch and TEST METER can no longer be used for checking signal crystal.

(5) Set the PRETUNE control at the preamplifier filter to the magnetron frequency. Use the tuning chart (fig. 12) to obtain the setting of the PRETUNE control. The tuning chart shows magnetron frequency versus dial reading of the PRETUNE control. To use the tuning chart, find the desired magnetron frequency in megacycles; then determine what dial reading intersects the magnetron frequency line along the diagonal line on the chart. This will be the setting for the PRETUNE control.

(6) Tune the local oscillator as outlined in paragraphs 4*c*(18) through (20), section 3 of TM 11–1167.

(7) Carefully adjust the PRETUNE control for maximum signal.

f. Perform the remaining portion of the equipment check and initial adjustment given in paragraph 4*c*(21) through (55) section 3 of TM 11–1167.

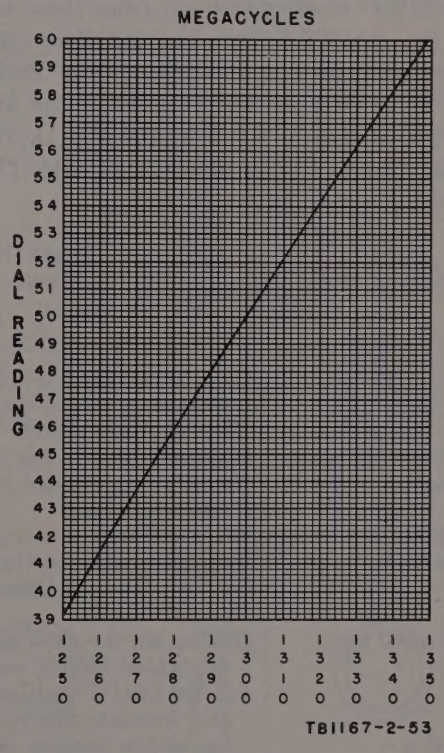

Figure 12. Tuning chart for the preselector-amplifier.

CHAPTER 3

OPERATION

SECTION I. CONTROLS AND INSTRUMENTS

25. General. This section locates, illustrates, and describes the uses of the various controls and instruments that are located in the components of Radar Set AN/FPS–36 to show the differences between Radar Set AN/FPS–36 and Radio Set AN/TPS–1D.

26. Controls and Their Uses (figs. 13 through 17). The following table lists the controls of the components of Radar Set AN/FPS–36 that are not a part of Radio Set AN/TPS–1D and indicates their functions. Also included are the controls on other components of the radar set that have been modified by the MWO to change them from those used in Radio Set AN/TPS–1D. For functions of other controls, refer to TM 11–1167 for the Radio Set AN/TPS–1D controls, TM 11–5047 for the Antenna Group OA–1124/FPS controls, and TM 11–5112 for the Azimuth and Range Indicator IP–345/TPS–1D controls.

Control	Function
Antenna Control C–1894/FPS (fig. 13)	
ANTENNA POWER signal lamp.	Glows when power is applied to all three phases of the 40-foot antenna drive motor.
OIL PRESSURE warning lamp.	Glows when lubricating oil pressure at the 40-foot antenna falls below 5 psi.
AIR PRESSURE warning lamp.	Glows when the pressure in the dry gas pressure system of the 40-foot antenna falls below 14 psi.
RADAR signal lamp.....	Glows when the pulse generator LOCAL-REMOTE switch is in the LOCAL position. This glow indicates that control of the 40-foot antenna is transferred to the pulse generator.
LOCAL signal lamp.....	Glows when the pulse generator LOCAL-REMOTE switch is in the REMOTE position; this glow indicates that control of the antenna is transferred to the antenna control.
Antenna Control C–1894/FPS (fig. 13)—Continued	
ANTENNA CONTROL toggle switch.	Controls rotation of the 40-foot antenna when the pulse generator LOCAL-REMOTE switch is in the REMOTE position.
Pulse Generator TD–169/TPS–1D (fig. 14)	
OIL PRESSURE warning lamp.	Glows when lubricating oil pressure at the 40-foot antenna falls below 5 psi.
AIR PRESSURE warning lamp.	Glows when the pressure in the dry gas pressure system of the 40-foot antenna falls below 14 psi.
ANTENNA POWER signal lamp.	Glows when power is applied to all three phases of the 40-foot antenna drive motor.
LOCAL-REMOTE switch	When in the LOCAL position: The 40-foot antenna is started and stopped at the pulse generator. Mti or normal operation is selected by the local indicator OPERATION switch (fig. 4–2, TM 11–1167), provided that the operation SELECTOR switch at the signal comparator is in REMOTE position. When turned to 200, the local indicator RANGE SELECTOR switch changes the repetition rate and switches the radar set to normal radar operation. When in the REMOTE position: The 40-foot antenna is started and stopped at the antenna control. Mti or normal operation is selected by the remote ppi VIDEO MTI-NORMAL switch (provided the OPERA-

Control	Function
Pulse Generator TD–169/TPS–1D (fig. 14)—Continued	
	TION SELECTOR at the signal comparator is in REMOTE position). When turned to 200, the remote ppi RANGE switch changes the repetition rate and switches the radar to normal radar operation.
LOCAL signal lamp.....	Glows when the LOCAL-REMOTE switch is in the LOCAL position.
REMOTE signal lamp...	Glows when the LOCAL-REMOTE switch is in the REMOTE position.
ANTENNA CONTROL.	Used to start and stop the 40-foot antenna when the LOCAL-REMOTE switch is in the LOCAL position.
Electrical Amplifier-Filter Assembly AM–1570/TPS–1D (fig. 15)	
PRETUNE Control.....	Used to tune the preselector to the frequency of the transmitted pulse.
SIG ADJ control.....	Used to adjust the local oscillator voltage coupled into the signal mixer. Adjust to red line on SIGNAL meter.
SIGNAL meter.....	A red-line type meter to indicate the correct crystal current in the signal mixer.
Radar Receiver-Transmitter RT–406/FPS–36 (fig. 16)	
COHO MIXER control..	Used to adjust the local oscillator voltage coupled into the coho mixer. Adjust to the red line on TEST METER when TEST SELECTOR switch is in COHO position.
Azimuth and Range Indicator IP–405/FPS–36	
PPI RANGE SELECTOR switch	Used to adjust the sweep range on the ppi display. Has five positions: 20, 40, 80, 160, and 200 miles. When the pulse generator LOCAL-REMOTE switch is in the LOCAL position and this PPI RANGE SELECTOR switch is turned to 200, the radar repetition rate is changed from 400 pps to 325 pps and the radar is switched to normal radar operation. *Note.* The only difference between this switch and the PPI RANGE SELECTOR switch is shown in figure 4–2 in TM 11–1167 is that a 200 position has been added to the right of the 160 position.
Azimuth and Range Indicator IP–406/FPS–36 (fig. 17)	
RANGE switch.....	Used to adjust the sweep range. Has five positions: 20, 40, 80, 160, and 200 miles. When the pulse generator LOCAL-REMOTE switch is in the REMOTE position, and this range switch is turned to 200, the radar repetition is changed from 400 pps to 325 pps and the radar is switched to normal radar operation.
VIDEO MTI-NORM switch	When the LOCAL-REMOTE switch is in the REMOTE position, this switch is used to select normal or mti radar operation.

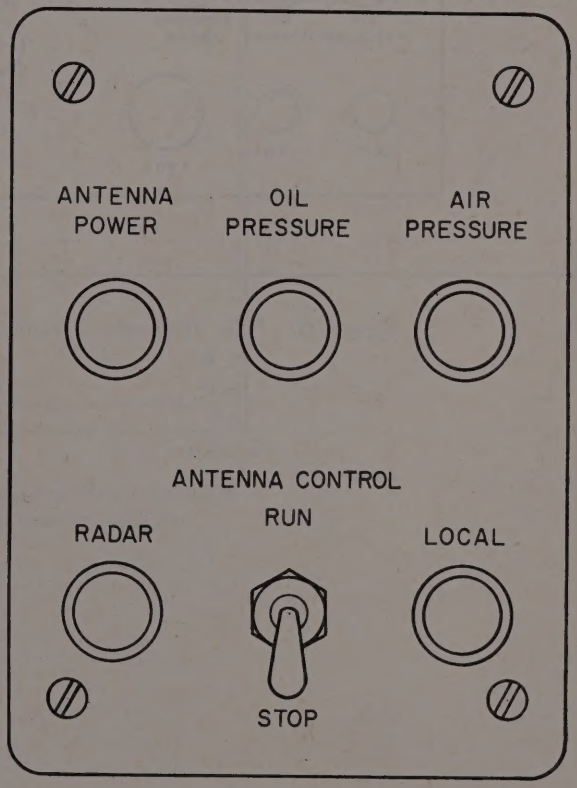

TB1167-2-10

Figure 13. Antenna Control C–1894/FPS, operating controls and signals.

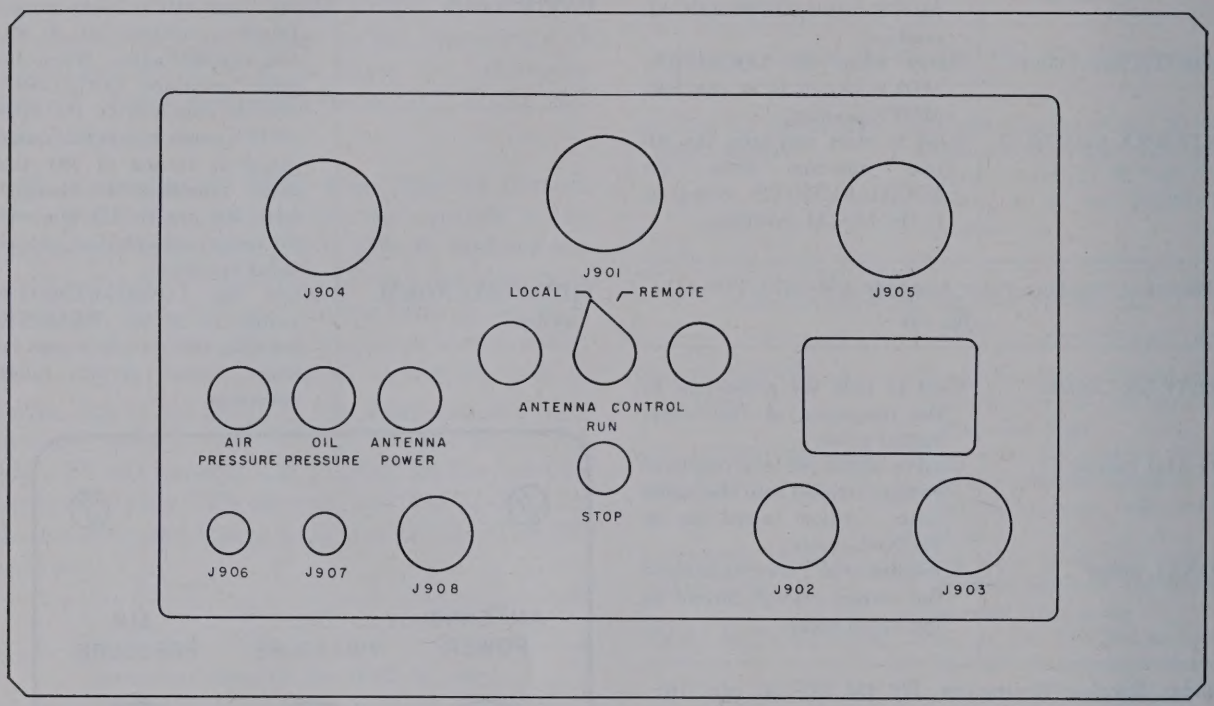

Figure 14. Pulse Generator TD–169/TPS–1D, operating controls and signals.

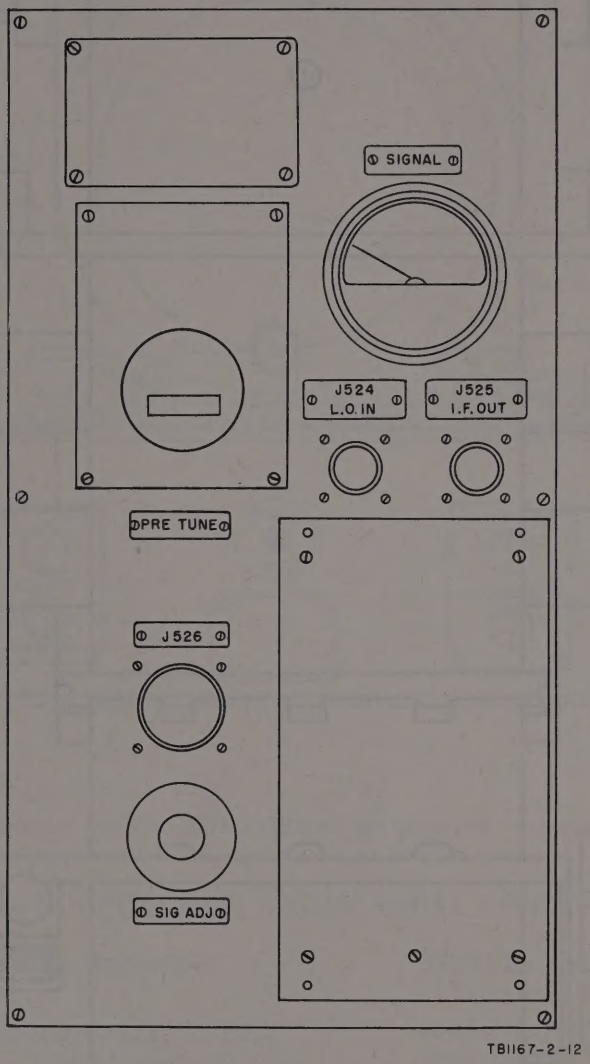

Figure 15. Electrical Amplifier-Filter Assembly AM–1570/TPS–1D, operating controls.

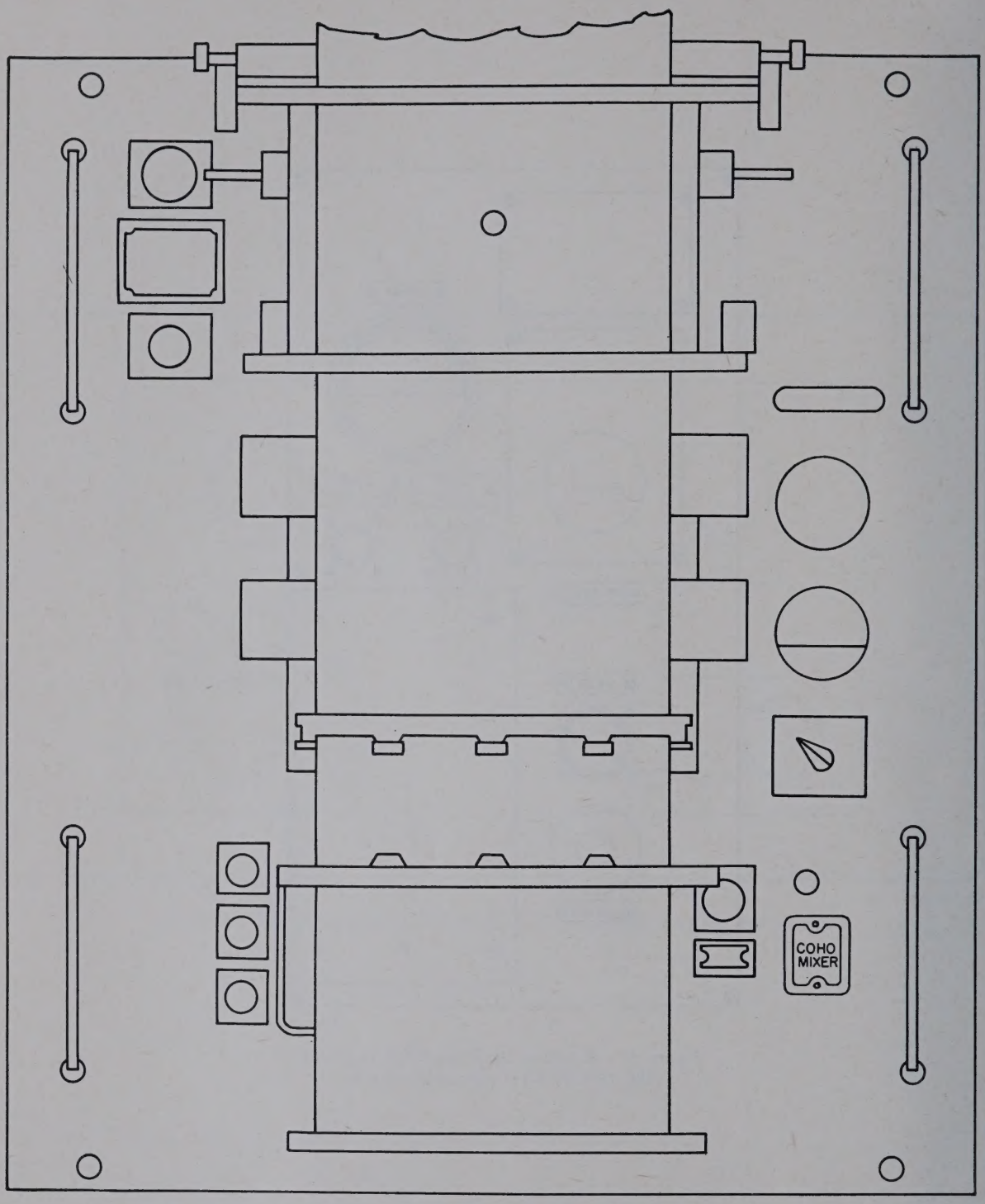

TB1167-2-13

Figure 16. COHO MIXER control on the receiver-transmitter.

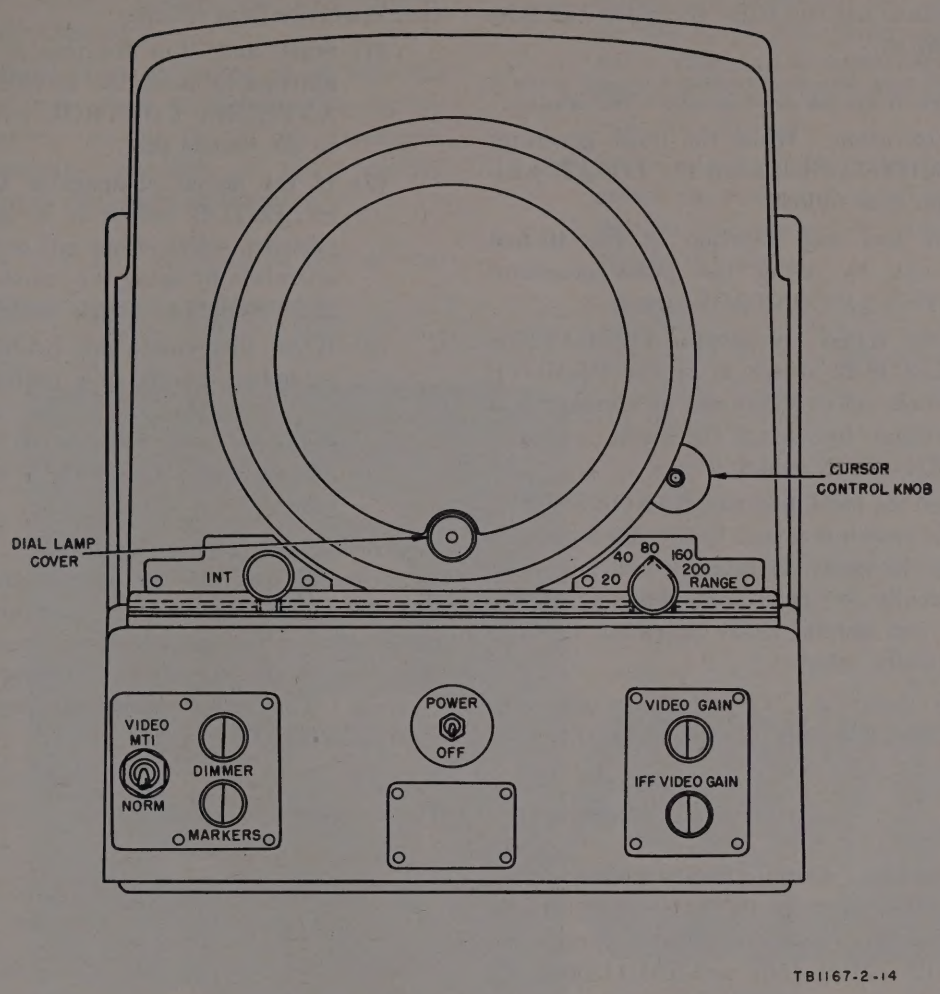

Figure. 17. VIDEO MTI-NORMAL switch at the remote ppi.

Section II. OPERATION UNDER USUAL CONDITIONS

27. Starting and Operating Procedure. *a. Radar Set AN/FPS–36.*

(1) Place the pulse generator LOCAL-REMOTE switch in the LOCAL position.

(2) Perform the starting and operating procedure as outlined in paragraph 2*a* through 2*c*(2), section 4 of TM 11–1167.

(3) Perform the procedures as outlined in section II, chapter 3 of TM 11–5047.

(4) Check signal crystal current, using the SIGNAL meter and the SIG ADJ control preselector-amplifier. Correct crystal current is indicated when the meter reads on the red line.

(5) Check the COHO crystal current and the MAG. FIL voltage, using the TEST METER and the TEST SELECTOR switch at the receiver-transmitter. Correct crystal current is indicated when the meter reads on the red line.

(6) Perform the starting and operating procedures given in paragraph 2*c*(5) through 2*d*(13), section 4 of TM 11–1167.

b. Remote Ppi. When Azimuth and Range Indicator IP–345/TPS–1D is used as a remote ppi, refer to chapter 3 of TM 11–5112 for operating instructions.

28. Special Operating Notes. The radar set and the 40-foot antenna can be operated either from the location of the major components of Radar Set AN/FPS–36 (local) or from the location of the remote ppi (remote). To select either local or

remote operation, use the pulse generator LOCAL-REMOTE switch.

Note. The operation of Radar Set AN/FPS-36 is the same as that of Radio Set AN/TPS-1D with the exceptions noted in this paragraph.

c. Local Operation. When the pulse generator LOCAL-REMOTE switch is in the LOCAL position, operation is as follows:

(1) Start and stop rotation of the 40-foot antenna by using the pulse generator ANTENNA CONTROL switch.

(2) If the signal comparator OPERATION SELECTOR switch is in the REMOTE position, select either mti or normal radar operation by using the local indicator OPERATION switch.

(3) When the local indicator RANGE SELECTOR switch is turned to the 200-mile position, the radar set repetition rate is automatically switched from 400 pps to 325 pps and normal radar operation is automatically selected.

b. Remote Operation. When the pulse generator LOCAL-REMOTE switch is in the REMOTE position, operation is as follows:

(1) Start and stop rotation of the 40-foot antenna by using the antenna control unit ANTENNA CONTROL switch attached to the remote ppi.

(2) If the signal comparator OPERATION SELECTOR switch is in the REMOTE position, select either mti or normal radar operation by using the remote ppi VIDEO MTI-NORMAL toggle switch.

(3) When the remote ppi RANGE switch is turned to the 200-mile position, the radar set repetition rate is automatically switched from 400 pps to 325 pps and normal radar operation is automatically selected.

c. Local and Remote Operation. Warning and signal lamps (par. 26) at both the pulse generator and the antenna control glow when power is applied to the 40-foot antenna and when there is abnormal operation of the pressure lubricating and dry gas systems. They also show the position of the LOCAL-REMOTE switch.

Section III. LUBRICATION

29. Lubrication Instructions. No further lubrication is necessary for Radar Set AN/FPS-36 other than that given in the applicable paragraphs of TM 11-5112, TM 11-1167, and TM 11-5047.

30. Parts Lubricated by Manufacturer that Do Not Require Subsequent Lubrication. Refer to the following chart in addition to the information given in the applicable paragraphs of TM 11-5112 and TM 11-5047.

Location	Part lubricated	Lubrication used	Reason subsequent lubrication is not required
Preselector gear train.	Gear tooth surfaces.	Silicone grease (G. E. Co. Versilube G-300).	Film applied is adequate for life of part.

Section IV. TROUBLE SHOOTING AT ORGANIZATIONAL MAINTENANCE LEVEL

31. General. For trouble-shooting information at the organizational maintenance level, refer to section 4, chapter 4 of TM 11-5112 and TM 11-5047. Organizational trouble-shooting instructions are also given in paragraph 3 of section 5 and paragraphs 7 and 10 of section 6 in TM 11-1167.

32. Specific Trouble-Shooting Notes. *a. Duplexer.* Tr tubes V503A and V504A are not used in the modified receiver-transmitter because there is a new, externally mounted waveguide duplexer containing two atr tubes and one tr tube. To replace atr tubes V507 and V508 and tr tube V509, refer to figure 5 and proceed as follows:

(1) Hold V507 with one hand to keep it from falling and with the other hand disengage the four knurled captive screws on the two clamp assemblies which hold V507 on the duplexer. Dismount the clamp assemblies and carefully remove V507 from the duplexer.

(2) Position the new atr tube on the duplexer and use the two clamp assemblies to hold

it in place. Tighten the four captive screws fingertight.

Caution: When installing an atr tube, do not use pliers to tighten the captive screws; use the thumb and forefinger. Excessive pressure on these captive screws may damage the tube.

(3) Hold V508 with one hand to keep it from falling and loosen the four captive screws on the cover and clamp assembly that holds V508 on the duplexer. Remove the cover and clamp assembly and pull V508 from the duplexer.

(4) Place a new V508 in the duplexer and attach the cover and clamp assembly with the four captive screws; observe the caution in (2) above.

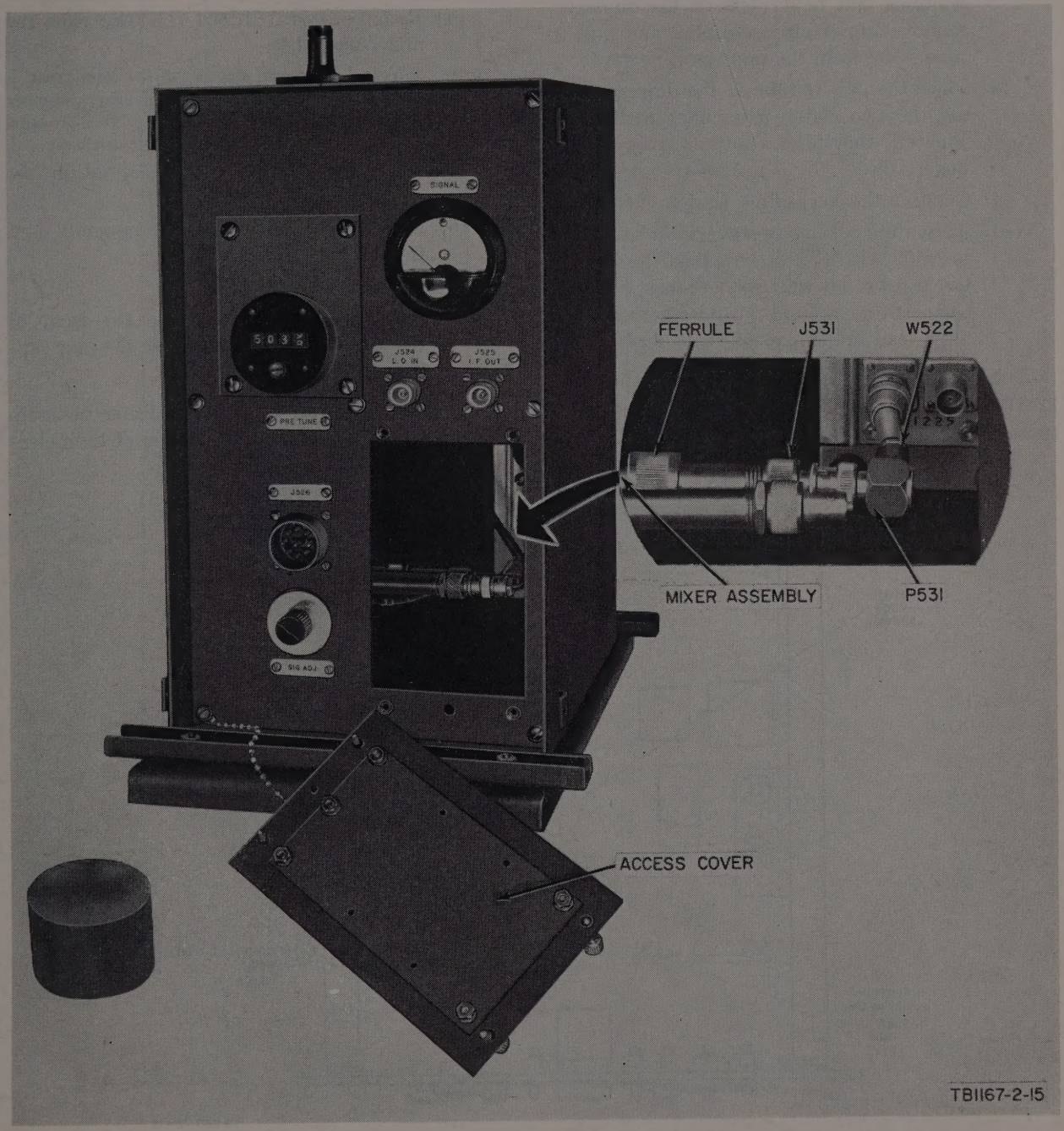

Figure 18. Signal mixer crystal replacement.

(5) Remove the 10 hexagonal head cap screws, flat washers, and lock washers, which attach coaxial-to-waveguide transition TW501 to tr tube V509 and remove the transition.

(6) Disconnect the keep-alive lead from tr tube V509.

(7) Hold V509 with one hand and loosen the four captive screws on the two clamp assemblies that hold V509 on the duplexer. Remove the clamp assemblies and pull tr tube V509 from the duplexer.

(8) Place the new tr tube in the duplexer and use the two clamp assemblies to hold it. Tighten the four captive screws only fingertight.

(9) Connect the keep-alive lead to V509.

(10) Attach the coaxial-to-waveguide transition to V509 with the 10 hexagonal head captive screws, flat washers, and lock washers. Connect the ground wire from the keep-alive lead under one of these screws.

b. Signal Mixer. Omit the directions in TM 11–1167 for replacing the signal mixer crystal because the modified radar set now locates the signal mixer crystal in the preselector-amplifier unit. To replace signal mixer crystal CR504, (fig. 18) proceed as follows:

(1) Loosen the four captive screws and dismount the access cover from the front of the preselector-amplifier.

(2) Disconnect P531 from J531.

(3) Loosen the ferrule and dismount J531 from the mixer assembly.

(4) Remove crystal CR504 (IN21E) from the mixer assembly.

Note. With the fingers of the hand that is holding the new crystal, touch the mixer assembly before inserting the new crystal. This prevents damage to the crystal due to static discharge.

(5) Carefully insert the new crystal in the mixer assembly.

(6) Mount J531 on the mixer assembly and tighten the ferrule.

(7) Connect P531 to J531.

(8) Attach the access cover to the front of the preselector-amplifier with the four captive screws.

33. Tube Location Drawings. Refer to figure 19 for the function, type, and location of each elec-

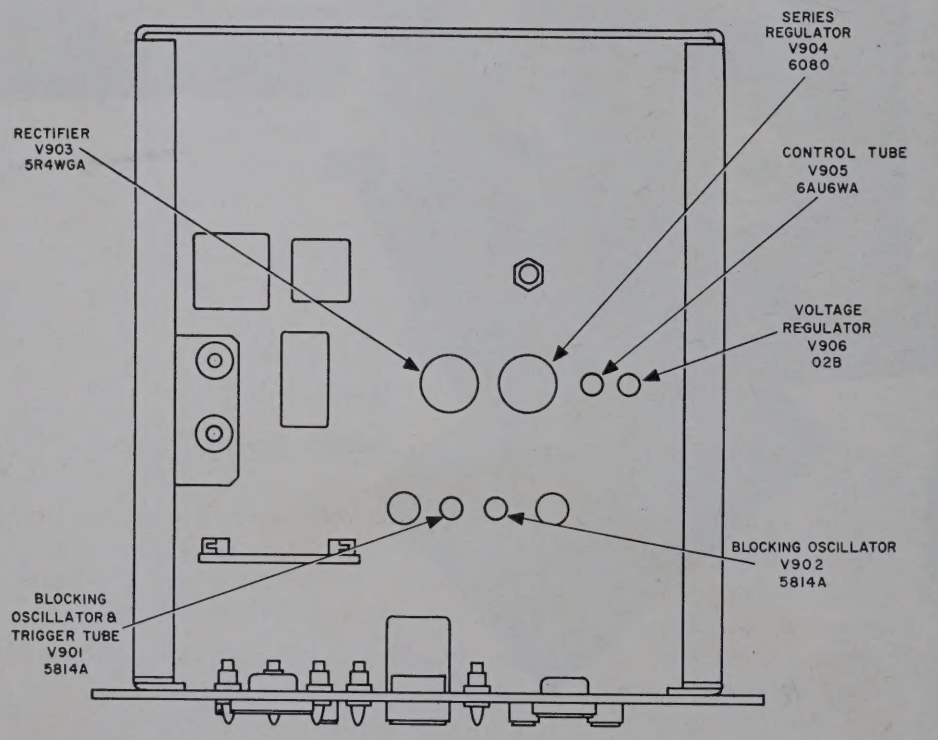

Figure 19. Pulse Generator TD–169/TPS–1D, tube location drawing.

tron tube used in the pulse generator. Figure 20 gives similar information on the electron tubes in the preselector-amplifier.

a. To reach the six tubes in the pulse generator, loosen the six captive screws and withdraw the chassis from the case.

b. The three electron tubes in the preselector-amplifier can be reached through the small cover at

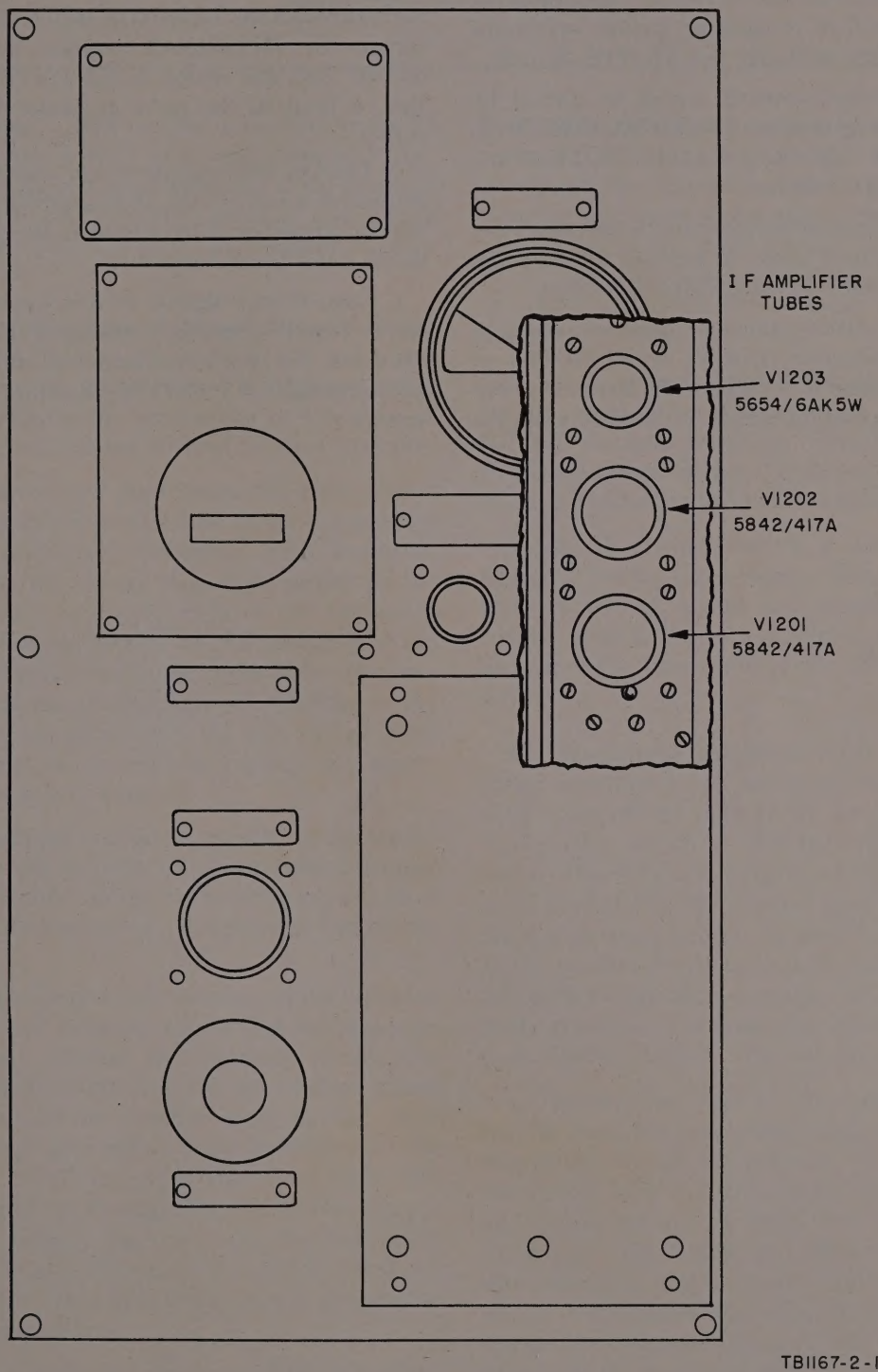

Figure 20. Electrical Amplifier-Filter Assembly AM–1570/TPS–1D, tube location drawing.

the lower right-hand side of the front panel. To remove the cover, loosen the four captive screws.

34. Trouble Sectionalization. Detailed sectionalization in Radar Set AN/FPS–36 is the same as that in Radio Set AN/TPS–1D. The following hints are helpful in recognizing trouble symptoms that are peculiar to Radar Set AN/FPS–36 only.

a. If the 40-foot antenna cannot be started by using the pulse generator ANTENNA CONTROL switch, be sure that the LOCAL-REMOTE switch is in the LOCAL position.

b. If the 40-foot antenna cannot be operated from the antenna control, check to see that the LOCAL-REMOTE switch is in the REMOTE position.

c. If mti operation cannot be obtained, check to see that the indicator (LOCAL or REMOTE) at the control position is not set for the 200-mile sweep range. (Mti operation cannot be obtained when the indicator at the control position is on the 200-mile range).

d. An inoperative radar set with indications of possible loss of trigger suggests a possible fault in the pulse generator circuit. If the radar operates normally with the TRIGGER switch at the modulator in the INTERNAL position and does not operate with the switch in the EXTERNAL position, a fault in the pulse generator is a possible cause.

e. Lack of echo signals or low sensitivity can be caused by a fault in the IF preamplifier in the preselector-amplifier or by a fault in the power supply in the pulse generator.

f. Loss of echo signals or low-amplitude signals can be caused by improper tuning of the preselector. To check the preselector, carefully adjust the preselector-amplifier PRETUNE control for maximum signals.

CHAPTER 4

THEORY OF OPERATION

35. General. This chapter gives the theory of operation of the circuits and components of Radar Set AN/FPS–36 that are not covered in the manuals on Radio Set AN/TPS–1D, Azimuth and Range Indicator IP–345/TPS–1D, or Antenna Group OA–1124/FPS.

36. Block Diagram of Signal Input Circuit. Figure 21 is a block diagram of the RF and signal input circuits of Radar Set AN/FPS–36. This diagram illustrates the functioning of a portion of the radar set that is not covered in other manuals.

a. Radio frequency power from the magnetron is supplied through a coaxial line to the transmitter waveguide transition (MT501). This transition transfers the RF energy from the coaxial to the waveguide mode and delivers it to the waveguide duplexer. The application of RF energy into the duplexer causes the atr and tr tubes to fire (become ionized); this effectively closes all openings in the sides of the waveguide and the full energy from the magnetron is transmitted through the waveguide to the 40-foot antenna.

b. A directional coupler is inserted in the waveguide run to the antenna. This directional coupler extracts a sample of the transmitter power; it is used for connecting an echo box or other test equipment.

c. The RF energy of the returned echoes is passed from the 40-foot antenna through the waveguide to the duplexer. During the receiving period, the duplexing tubes do not fire and the received signal is transferred to the receiver input circuit. The nonionized atr tubes reflect a low impedence at the junction of the T and effectively close off to the received signal the waveguide path to the magnetron. The signals, therefore, are directed down through the tr tube to receiver waveguide transition TW501 which transmits them to the preselector through a coaxial line.

d. The preselector is a band-pass filter, consisting of three cavities, that provides high attenuation to image frequencies and signals from other radars operating at other frequencies. The preselector introduces approximately 1-db attenuation at its resonant frequency (magnetron frequency), has a pass band (at the 3-db points) of approximately 12 mc, and attenuates the image frequency (120 mc above and below the resonant frequency) approximately 80 db.

e. Signals from the preselector are supplied to a coaxial signal mixer where they are mixed with the RF from the local oscillator. The 60-mc difference frequency or intermediate frequency from the signal mixer is conducted to the IF preamplifier.

f. The IF preamplifier is a low-noise, 60-mc amplifier having three tubes. This unit raises the level of the IF signal and transfers it through coaxial cable to the IF amplifier in the signal comparator. The bandwidth of the IF preamplifier is 4 mc.

37. Waveguide Duplexer. The waveguide duplexer operates as an automatic switching device that closes off the path to the receiver during the transmitting period so that the transmitter power will be directed to the antenna and will not damage, or be absorbed by, the receiver input circuits. During the receiving period, the path from the antenna to the receiver is opened and the path to the transmitter is closed, thus directing the received signal to the receiver. The basic principles of operation of a waveguide duplexer (fig. 22) are as follows:

a. Transmitting Period. The transmitted pulse travels from the magnetron along the half-height waveguide toward the antenna. A small part of the energy from the pulse enters the two atr tubes and causes the gas to ionize and break down the spark gap. The spark gap effectively produces a short circuit at the waveguide wall that passes the energy of the transmitter pulse down the waveguide toward the antenna. In a similar manner, the tr tube is fired, creating an effective short circuit that closes off the receiver branch.

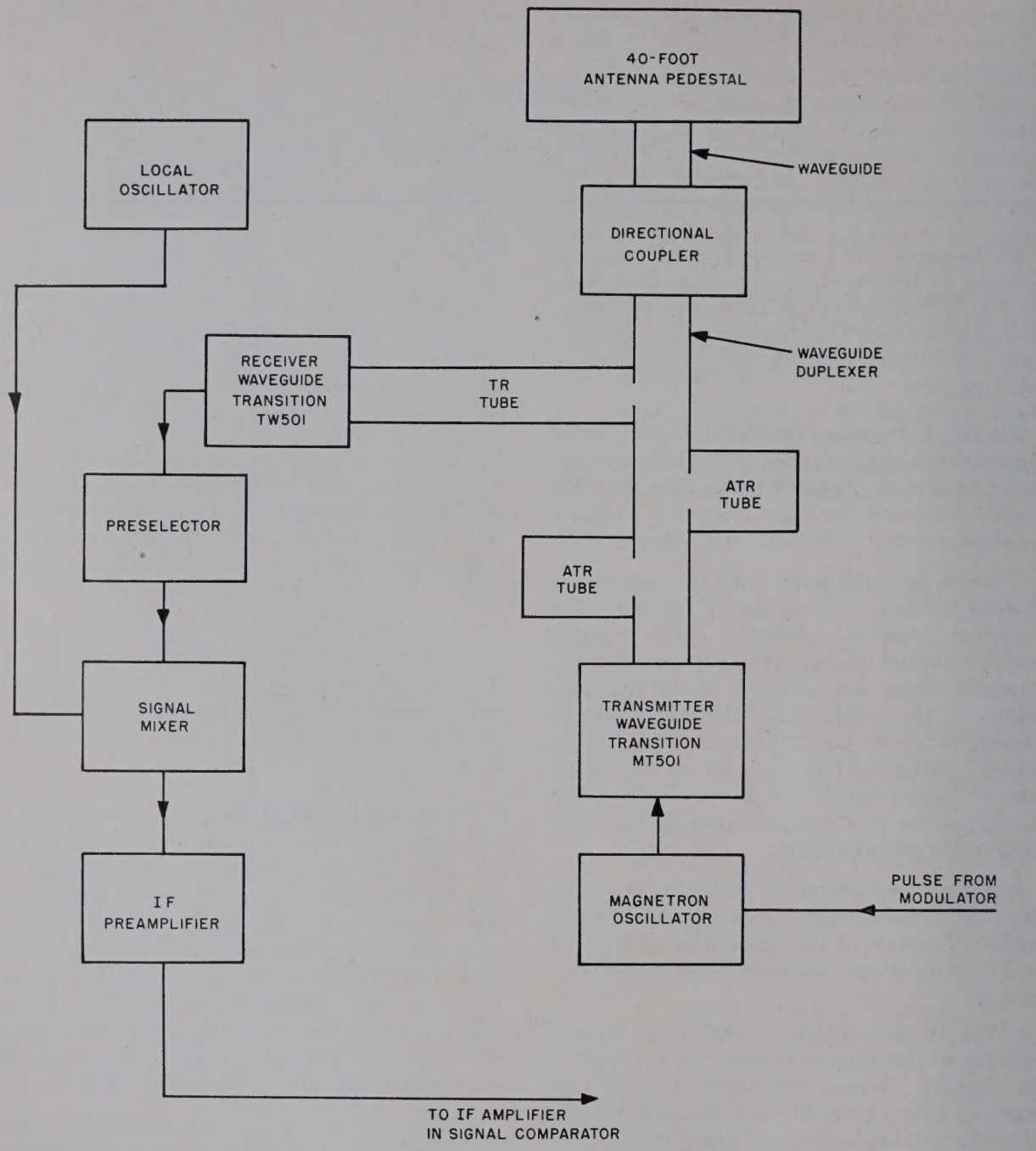

Figure 21. Block diagram of the RF and signal input circuits.

b. Receiving Period. During the receiving period, when no power is being supplied from the transmitter, the spark gaps at the tr and the atr tubes do not break down. Under these conditions, the short circuit at the end of the atr tubes create an effective short circuit (low impedance) at the center of the waveguide, one-half wave length away. This low impedance is reflected up to the receiver branch junction one-half wave length away and thus effectively closes off the branch to the transmitter and prevents the received energy from the antenna from being absorbed by the inoperative transmitter. The nonfiring tr tube presents a low-impedance path to the received signal and thus passes it along to the

receiver. The two atr tubes are positioned one-half wave length apart so that the low impedance reflected from the lower atr tube further lowers the impedance at the upper atr tube. Therefore, the low impedance reflected to the junction of the receiver branch is the combined effect of the two atr tubes.

38. Transmitter Waveguide Transition. Power from the magnetron is fed through a coaxial line to the waveguide duplexer with the transmitter waveguide transition (MT501) accomplishing the transformation from the coaxial mode of propagation to the waveguide mode. This transition (fig. 23) operates as follows:

a. A stub consisting of an extension of the coaxial center conductor is extended into the waveguide. It is rigidly supported by a stub-supporting fin that is welded into the waveguide parallel to the width dimension. This stub, placed perpendicular to the electric field within the waveguide, acts as an antenna that radiates energy into the waveguide. The necessary impedance match for minimum reflections is obtained experimentally at the factory by adjusting the size, position, and shape of the stub and stub-supporting fin.

b. This transition is designed for durable and rigid construction and good impedance-matching characteristics over the frequency range of the radar set (1,220 to 1,350 mc).

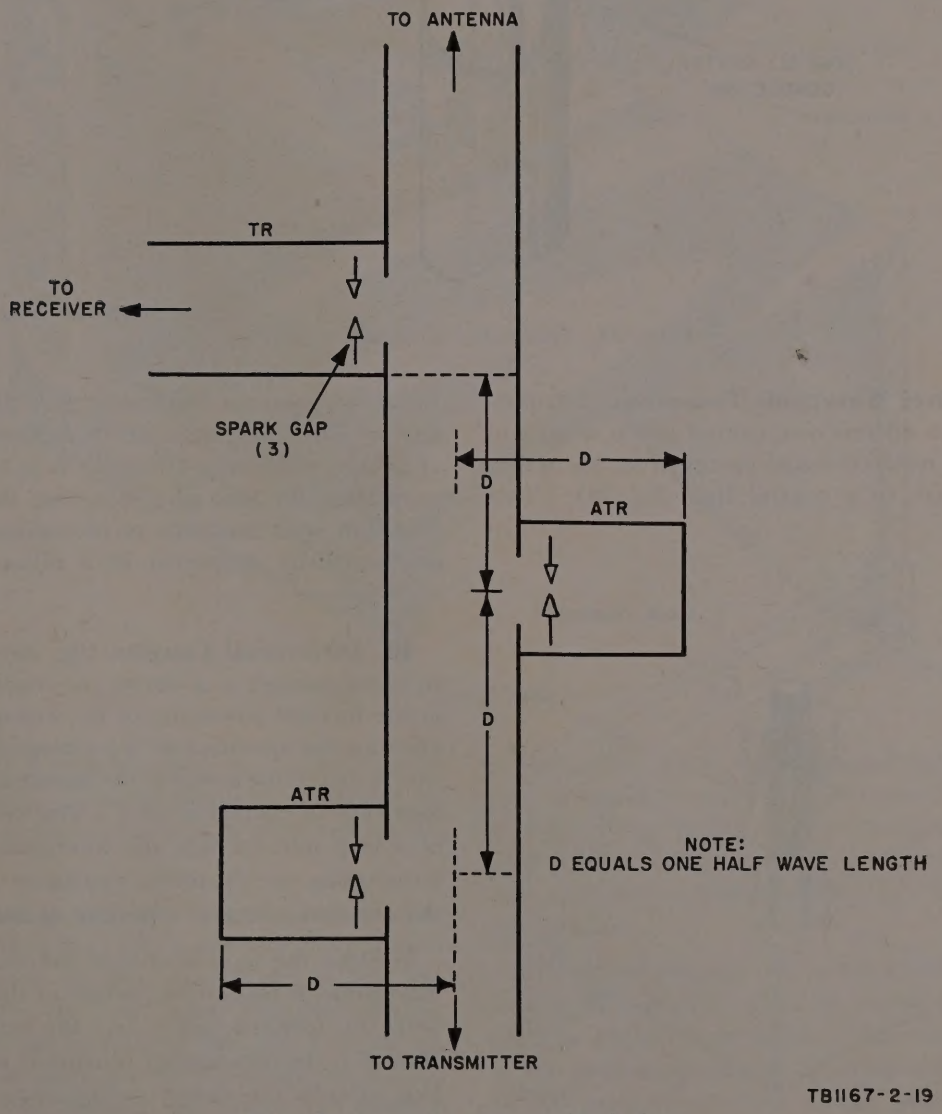

Figure 22. Operation of waveguide duplexer.

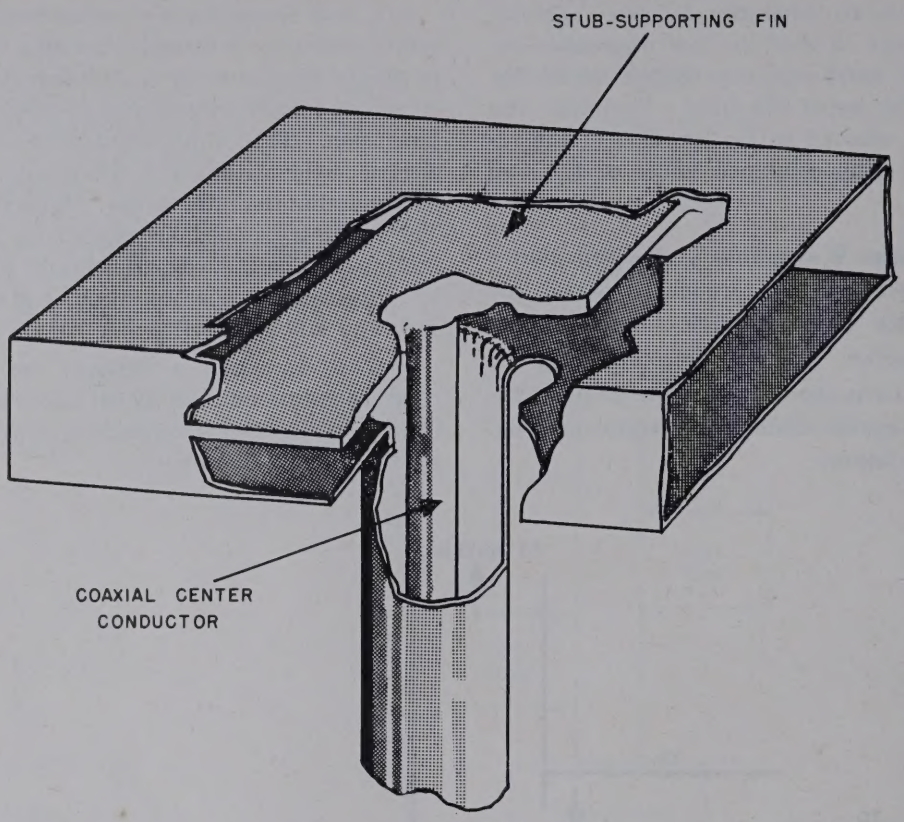

Figure 23. Transmitter waveguide transition.

39. Receiver Waveguide Transition. A transition having a dielectric-supported probe is used to transfer the received signal energy from the waveguide duplexer to a coaxial line (fig. 24). This transition operates theoretically in the same manner as does the transmitter waveguide transition (par. 42). The only difference is in the method of supporting the stub and matching the impedance. The stub is an extension of the coaxial center conductor rigidly supported in a pillar of dielectric material.

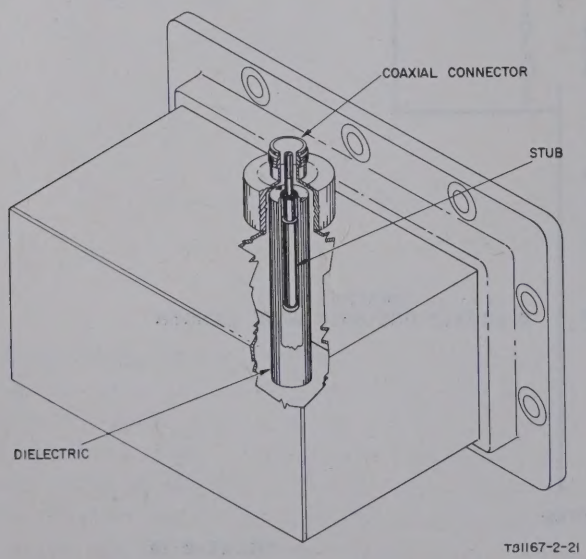

Figure 24. Receiver waveguide transition.

40. Directional Coupler (fig. 25). *a.* The directional coupler is a device for coupling a sample of the forward power out of the waveguide without affecting the operation of the waveguide in its function of delivering power to the antenna. A resistive-loop type of coupler is used. This coupler consists of a loop inserted into the waveguide field with a terminating or absorbing resistance connected at one end and a coaxial connector at the other.

b. Since the loop intercepts the field within the waveguide, it picks up a portion of the energy from both the forward power and the reflected power. However, the terminating resistor at one end of the loop absorbs the energy picked upon from the reflected wave so that the energy delivered at coaxial

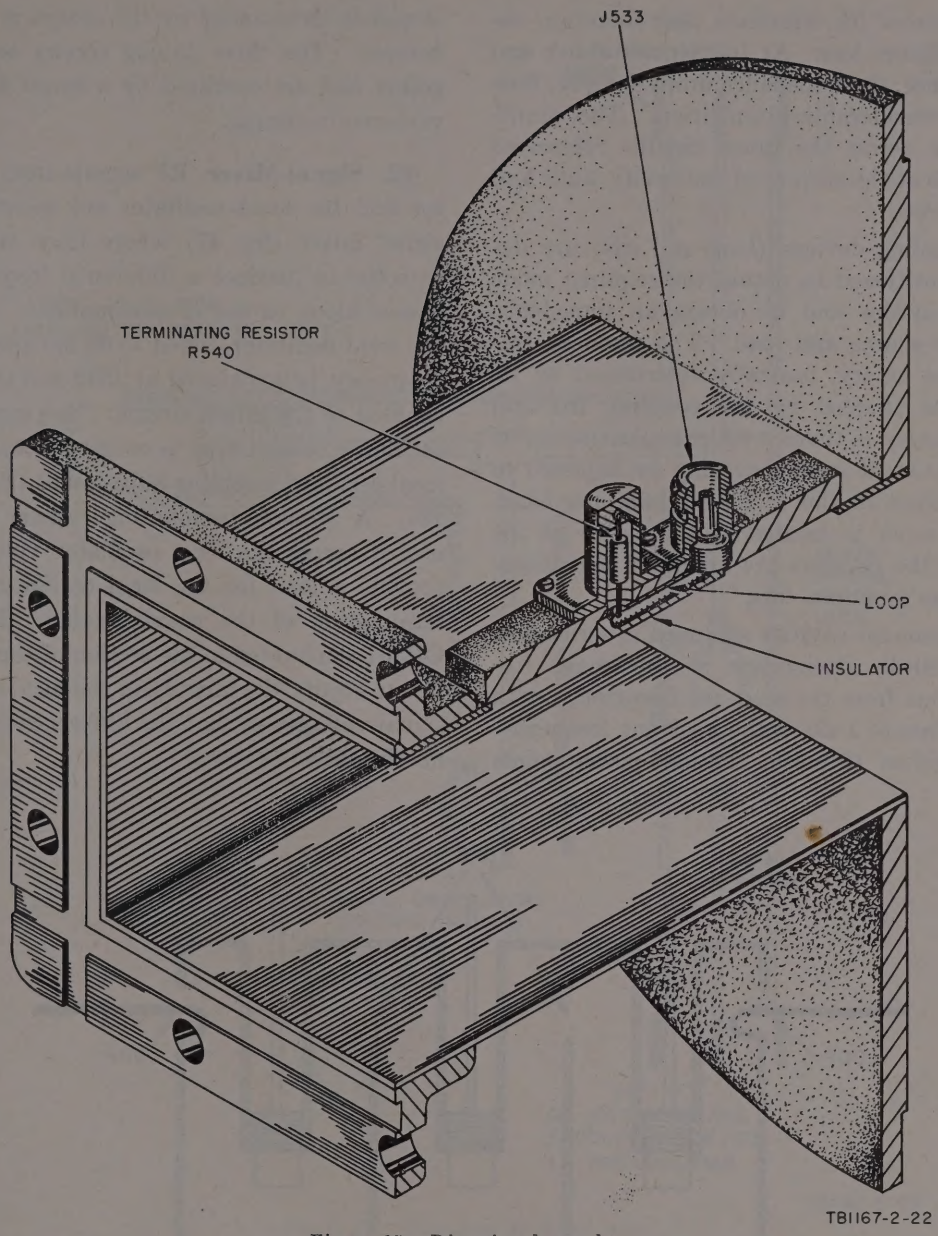

Figure 25. Directional coupler.

connector J533 is proportional to the forward power in the waveguide. Coaxial connector J533 may be used for connecting an echo box or other test equipment.

41. Preselector (fig. 26). *a.* The preselector is a band-pass filter that uses a series of three direct-coupled resonant cavities, each tuned to the frequency of the received signal (magnetron frequency). Energy is coupled into the first cavity and out of the third cavity by means of a loop, and the coupling between one cavity and another is through an iris or a small round hole. The purpose of the band-pass filter is to pass the frequency of the received signal with a minimum of loss and offer a large attenuation to the image frequency and other undesirable signals outside the pass band of the filter.

b. The operation of one of the cavities is similar to that of a parallel resonant circuit having a resistance across its terminals (neglecting the effect of the coupling devices). At resonance, the cavity or the parallel resonant circuit offers maximum

impedance across its terminals and therefore introduces minimum loss. At frequencies above and below resonance, the impedance drops sharply, thus introducing considerable attenuation. The shunting resistance across the tuned circuits represents the power loss at the surface of the cavity walls and the tuning screw.

c. The coupling devices (loop and iris) are designed and positioned to obtain the required mode within the cavities and to obtain an impedance match to the source and load. The resonant frequency of the cavity, basically determined by its dimensions, is affected by the coupling iris and loop. The cavity is tuned with a capacitive screw so that its resonant frequency may be adjusted to the desired point in the 1,220- to 1,350-mc band. This tuning screw is located at the center of the cavity where the currents are minimum and therefore introduces minimum loss.

d. Three resonant cavities arranged in series give the desired 80-db attenuation at the image frequency (120 mc from the resonant frequency) with an insertion loss of 1 db at the resonant frequency. The pass band of 12 mc at the half-power points is mainly determined by the design of the coupling devices. The three tuning screws are geared together and are operated by a single knob for convenience in tuning.

42. Signal Mixer. RF signals from the preselector and the local oscillator are delivered into the signal mixer (fig. 27) where they are mixed and detected to produce a difference frequency that is passed along to the IF preamplifier. Energy from the local oscillator, tuned to 60 mc above the signal frequency, is introduced at J532 and is capacitively coupled to the mixer circuit. The amount of local oscillator voltage that is coupled is variable by the local oscillator coupling adjustment (SIG ADJ, par. 26). A 50-ohm terminating resistor disk is connected across the local oscillator voltage input to provide a load for the local oscillator and proper termination of the coaxial cable. Mixer crystal CR504 is mounted in the section of the rigid coaxial line to rectify the mixture of the local oscillator and signal voltages so that the difference frequency can be obtained.

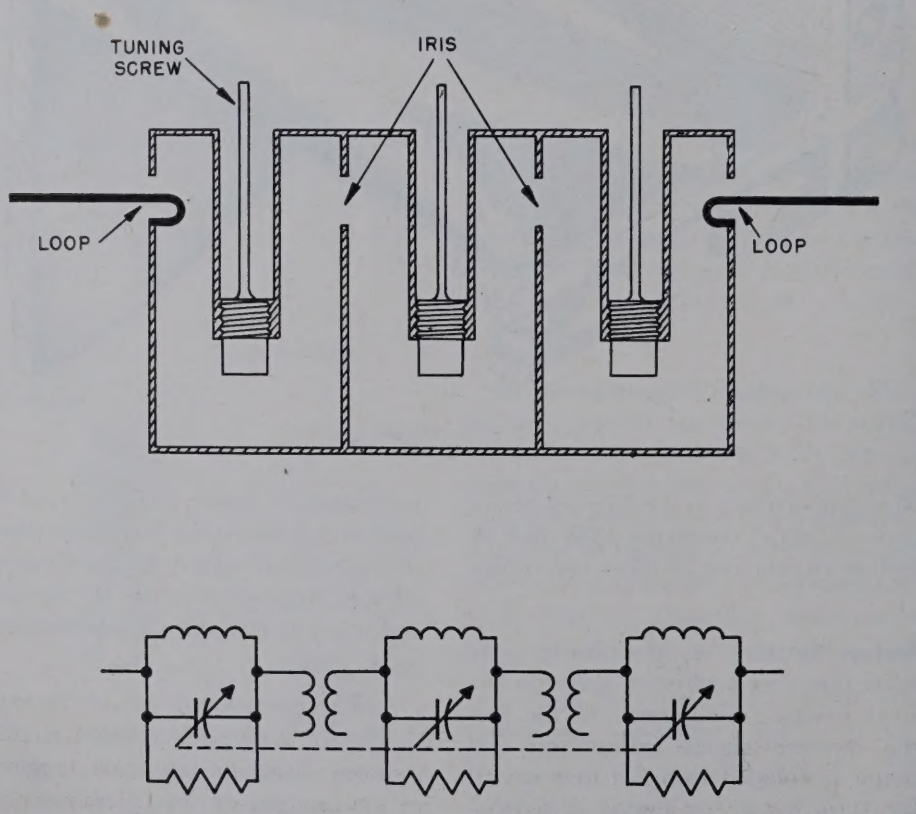

Figure 26. Theory of preselector.

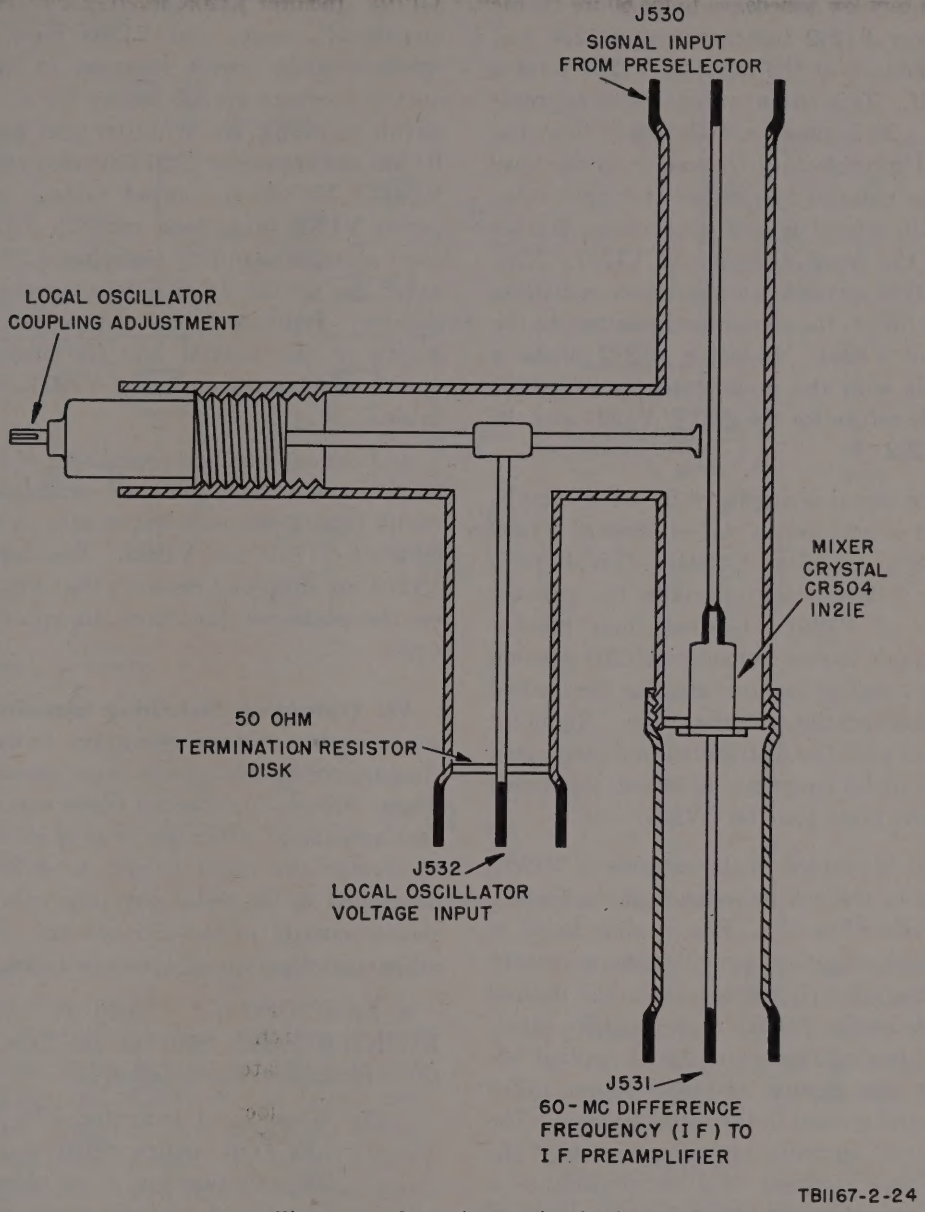

Figure 27. Operation of signal mixer.

43. IF Preamplifier (fig. 28). *a.* This three-tube IF preamplifier functions to raise the level of the 60-mc signal from the signal mixer to a convenient level for transmission over a coaxial line to the IF amplifier in the signal comparator. The IF preamplifier has a bandwidth of 4 mc around 59 mc. The three-tube circuit is tuned to a center frequency of 59 mc for bandwidth and noise considerations.

b. Signals, converted to the 60-mc intermediate frequency, are conducted to the input of the IF preamplifier through coaxial cable W522 and coaxial connectors P/J1224. The direct-current component of the signal crystal current is passed through low-pass filter C1201, L1201, and C1206 to remove the 60-mc components and conducted to SIGNAL meter M503 for registering the signal mixer crystal current. Resistor R539 and C536, connected across the meter, averages the current through the meter so that the desired crystal current is indicated by a center red-line deflection of the meter.

c. The 60-mc difference frequency is coupled through C1201 to the grid circuit of V1201. This capacitor blocks the dc component of the crystal

current and offers very low impedance to the 60-mc signal. Inductor L1202 together with C1216 and the total capacitance at the input to V1201 form a resonant circuit. This circuit resonates to approximately 58 mc. It is tuned a little lower than the 60-mc nominal intermediate frequency to decrease the effect of the noise at the grid of the input tube. Capacitor C1216 is used as part of a voltage divider in series with the input capacity of V1201. This series combination serves as an impedance-matching transformer to match the signal mixer output to the input circuit of V1201. Inductor L1212 forms a resonant circuit with the input capacity of V1201 and acts as a dc return for the grid of V1201 and the cathode of V1202.

d. The 60-mc signal is amplified by triode amplifier V1201 and is coupled to the cathode of V1202 through coupling capacitor C1204. This tube is neutralized by L1204 which resonates the grid-to-plate capacity of V1201. Cathode bias resistor R1201 and cathode bypass capacitor C1205 develop approximately 1 volt of cathode bias for the desired operating characteristics of the tube. Inductor L1203 resonates with the distributed and stray lead capacity to the center frequency of 59 mc; this tuned circuit forms the plate load for V1201.

e. The signal is coupled to the cathode of V1202, which, because of the low impedance of the circuit, loads V1201 rather heavily. This loading helps to stabilize the first stage and provides the necessary damping of the tuned circuit to obtain the desired bandwidth. Amplifier V1202 is a grounded grid-type amplifier having the input signal applied between cathode and ground and the output taken between plate and ground in the usual manner. The input and output currents are approximately the same, but the input current at a low impedance is reproduced in the plate circuit at a higher voltage and out of a higher impedance. This type of amplifier is more stable than the usual type of grounded cathode triode because of the shielding effect of the grid. Inductor L1209 is the plate load impedance, having a low dc resistance but a high impedance to the 60-mc signal frequency; it also neutralizes the cathode-plate capacity of V1202 for greater stability. Resistor R1202 and capacitor C1208 constitute a cathode biasing network, and R1205 is a damping resistor that suppresses parasitic oscillations.

f. The 60-mc signal is coupled from the plate of V1202 to the grid of V1203 through coupling capacitor C1210. Inductor L1205, together with the distributed, stray, and V1203 input capacitance, forms a tuned circuit resonant to the center frequency; resistor R1202 lowers the Q of this tuned circuit to obtain the required pass band. Resistor R1206 and capacitor C1212 develop cathode bias for V1203. The 60-mc output voltage is taken from across V1203 plate load inductor L1206 and supplied through coupling capacitor C1214 to the coaxial line to the IF amplifier in the signal comparator. Inductor L1207 compensates for the capacity of the coaxial line for proper impedance match between the output of V1203 and the coaxial cable.

g. A decoupling filter, consisting of R1204, R1209, C1202, and C1211, prevents oscillations that may result from a common impedance in the plate circuits of V1201 and V1203. Resistors R1207 and R1208 are dropping resistors that lower the voltage on the plates of the tubes to approximately 120 volts.

44. Operation Switching Circuits. The radar set contains certain operation switching circuits that are not covered in any other manual or bulletin. These circuits function to place control of the 40-foot antenna at either the local or remote indicators, to change the radar trigger to a 325-pps trigger developed in the pulse generator, and to facilitate remote control of the mti system. Figure 29 is a schematic diagram of these switching circuits.

a. Local Control. Figure 29 shows LOCAL-REMOTE switch S901 in the LOCAL position; the circuits operate as follows:

(1) When local indicator PPI RANGE SELECTOR switch S619 is turned to the 200-mile position, a set of contacts closes. The closed contacts cause current to flow from the +24-volt supply at the power supply, through interlock switch S504B and magnetron overtemperature switch S501 at the receiver-transmitter, through the coil of relay K901, and through closed contacts of LOCAL-REMOTE switch S901 to ground. This energizes the coil of K901 which operates three sets of contacts.

(2) One set of contacts (3 and 11) on K901 opens and disconnects the 400-pps radar trigger from the blocking oscillator in the pulse generator. When the 400-pps trigger is removed, the blocking oscillator

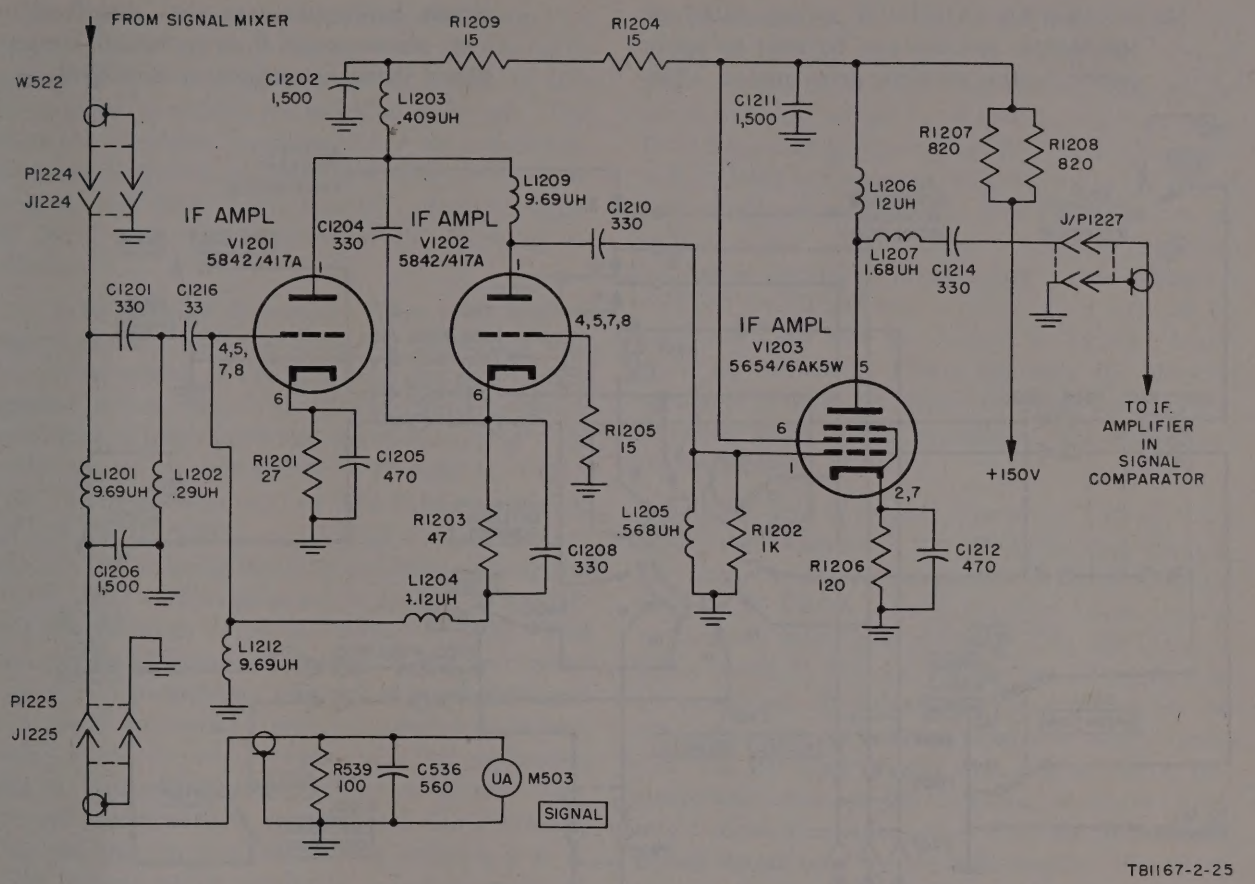

TB1167-2-25

Figure 28. IF preamplifier, schematic diagram.

operates as a free-running oscillator (par. 45) at a frequency of approximately 325 pps. Two other sets of contacts on K901 close and apply 24 volts dc across the coils of K3300 and K3301 in the signal comparator. This circuit is completed through the REMOTE contacts of OPERATION SELECTOR switch S2354. When relays K3300 and K3301 are activated, the radar set is adjusted for normal operation (no cancellation of fixed targets).

(3) OPERATION switch S601 at the local indicator is connected through contacts 4–3 and 1–12 of S901 to the coils of relays K3300 and K3301. Thus, when S619 is not in the 200 mile position, S601 can be used to select the type of radar operation desired.

(4) ANTENNA CONTROL switch S902 at the pulse generator, when placed in the RUN position, closes a circuit, through contacts 9–10 of S901 and the contacts of S801, to apply 120 volts ac across the coil of relay K801 in the 40-foot antenna. Relay K801 applies power to the antenna drive motor. This circuit is protected by fuse F807 at the 40-foot antenna (TM 11–5047).

b. Remote Control. Turn S901 (fig. 29) clockwise for remote operation. When S901 is in the REMOTE position, the circuits operate as follows:

(1) When remote ppi RANGE switch S606 is in the 200-mile position, it closes a set of contacts that activates relay K901 through the remote contacts (8 and 6) of S901. The circuit is the same as that described in *a*(1) above.

(2) The result of activating relay K901 is given in *a*(2) above.

(3) When VIDEO MTI-NORMAL switch S605 of the remote ppi is snapped to the NORMAL position, it completes a circuit through contacts 5–3 and 2–12 of S901 that activates relays K3300 and K3301.

(4) ANTENNA CONTROL switch S1001 at the remote ppi site can be used to apply power to the antenna drive motor. The circuit is the same as that described in *a*(4) above except that the circuit is completed through contacts 11–9 of S901.

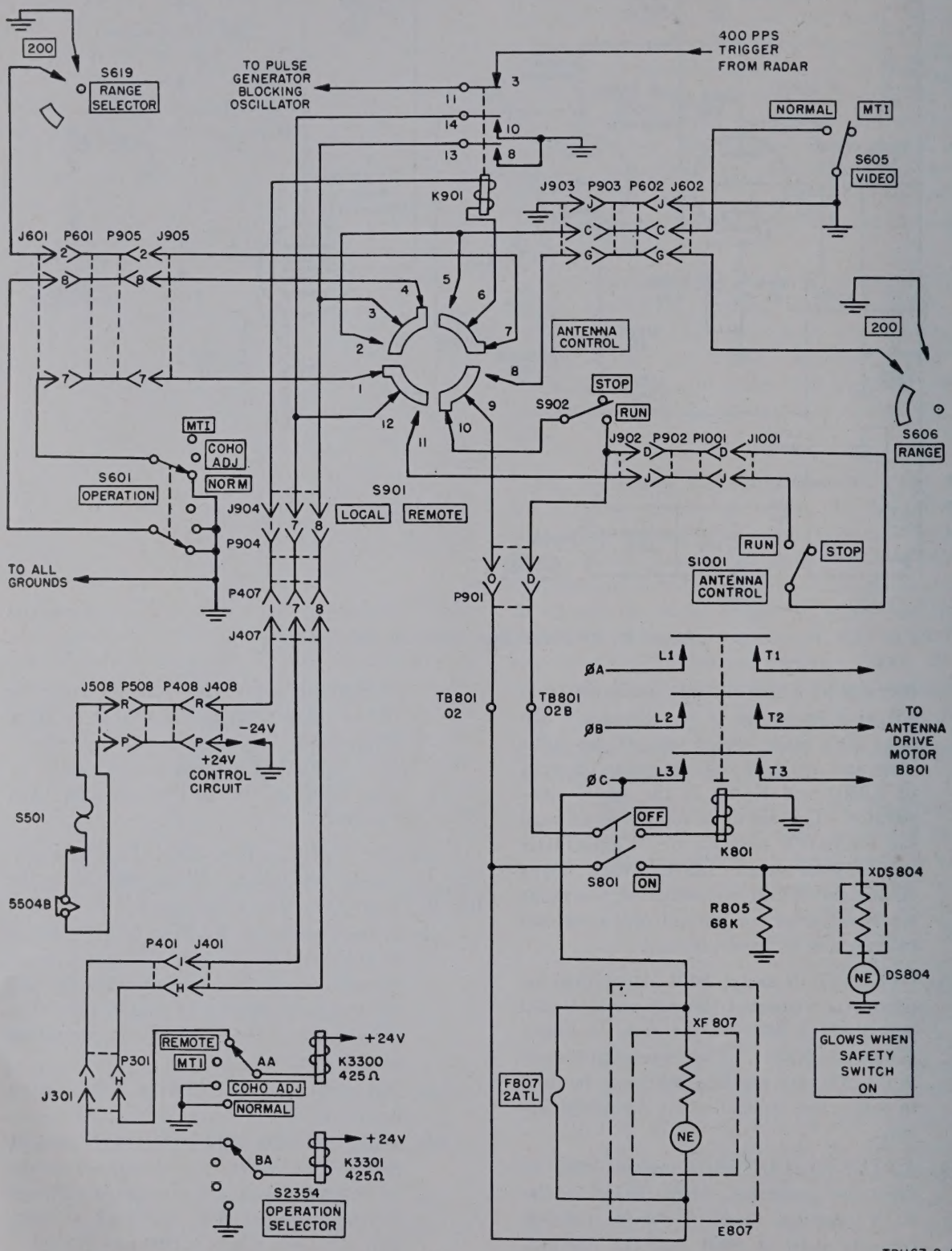

Figure 29. Operation switching circuits, schematic diagram.

45. Pulse Generator Blocking Oscillator. A trigger-generating blocking oscillator in the pulse generator is used to generate either a 325- or 400-pps trigger for pulsing the modified radar set. This blocking oscillator operates either as a free-running or a triggered oscillator depending on the position of relay K901 (par. 44*a*(2)). Refer to figure 30 for a schematic diagram of the blocking oscillator.

a. Free-Running Operation. When relay K901 is energized, the circuit that applies the 400-cycle trigger to the cathode of V901A is open and no trigger is applied to that tube. The voltage dividing network consisting of R920 and R921, connected across —150 volts, applies approximately —27 volts to V901A grid. Under these conditions, this tube remains cut off and V901B, V902A, and V902B in parallel operate as a free-running blocking oscillator. The initial rise in plate current as power is applied to the circuit flows through the plate windings of T902. This rise in current induces a voltage in the grid windings of this transformer that drives the control grid in a positive direction, further increasing plate current. As the three triodes approach full conduction and the rate of increase of plate current decreases, the voltage induced in the grid coil also decreases. The resulting drop in grid voltage causes a drop in plate current which results in a further swing of grid voltage in the negative direction. The tubes are, therefore, driven sharply into cutoff. The charge thus placed on capacitor C903 holds the grids of these tubes below cutoff. The voltage across C903 immediately starts to change toward the divider voltage at the junction of R918 and R919 with the charging current flowing through resistors R916 and R917. This continues until the tubes are again in a state of conduction, at which time the operation is repeated. The frequency of the blocking oscillator pulses is determined by the charging rate of C903 through R916 and R917. A negative output trigger is coupled off across plate load resistor R923 through coupling capacitor C902. The three triodes in parallel have a low plate resistance and provide the low impedance output required for the coaxial cable line to the radar set. Resistor R922 and capacitor C901 constitute a decoupling network that is designed to isolate the transients developed in the blocking oscillator from the 300-volt power supply. Capacitors C905 and C906 together with inductor L902 form a series resonant circuit. This circuit is resonant to 1,300 cycles, which is the fourth harmonic of the 325-pps repetition rate. This resonant circuit, with crystal diode CR901 and capacitor C907, constitute a calibration circuit which is used to indicate when the blocking oscillator is correctly adjusted. When the blocking oscillator frequency is adjusted to 325 pps, it is harmonically related to the resonant frequency of the circuit and maximum current will flow in the series resonant circuit. Under these conditions, maximum voltage is developed across L902. This voltage is rectified by CR901 and averaged to a dc level by capacitor C907 and is measured at TP904. Maximum dc voltage at TP904 indicates the blocking oscillator is correctly adjusted to 325 pps. Potentiometer R917 is the repetition rate adjustment potentiometer.

b. 400-Cycle Triggered Operation. When relay K901 is not energized, the 400-cycle negative trigger from the signal comparator is applied to the cathode of V901A. Each negative trigger causes momentary conduction of V901. This tube is biased below cutoff (*a* above). When the 400-cycle trigger is applied, the operation of the blocking oscillator is the same as that described in *a* above except that the 400-cycle trigger that drives V901A into conduction restores the blocking oscillator tubes into a conducting state sooner than the free-running period determined by the RC circuit. Therefore, the blocking oscillator will synchronize with the 400-cycle trigger applied from the signal comparator.

c. Output Characteristics. Under either free-running or triggered operation, the blocking oscillator furnishes a negative trigger of approximately 3-microsecond duration and approximately 45 volts amplitude.

d. Trigger Interconnections. In Radio Set AN/TPS–1D, the trigger for mti operation is applied from the signal comparator direct to the EXTERNAL-INTERNAL switch in the modulator. In Radar Set AN/FPS–36, the trigger for mti operation on the 20-, 40-, 80-, and 160-mile ranges comes from the signal comparator and is applied to the pulse generator. This trigger synchronizes the blocking oscillator in the pulse generator. The output of the pulse generator is then fed to the modulator EXTERNAL-INTERNAL switch.

46. Pulse Generator Power Supply. The 150-volt regulated power supply in the pulse generator furnishes 150 volts at 85 milliamperes and 6.3 volts ac for operating the three-tube preamplifier in the

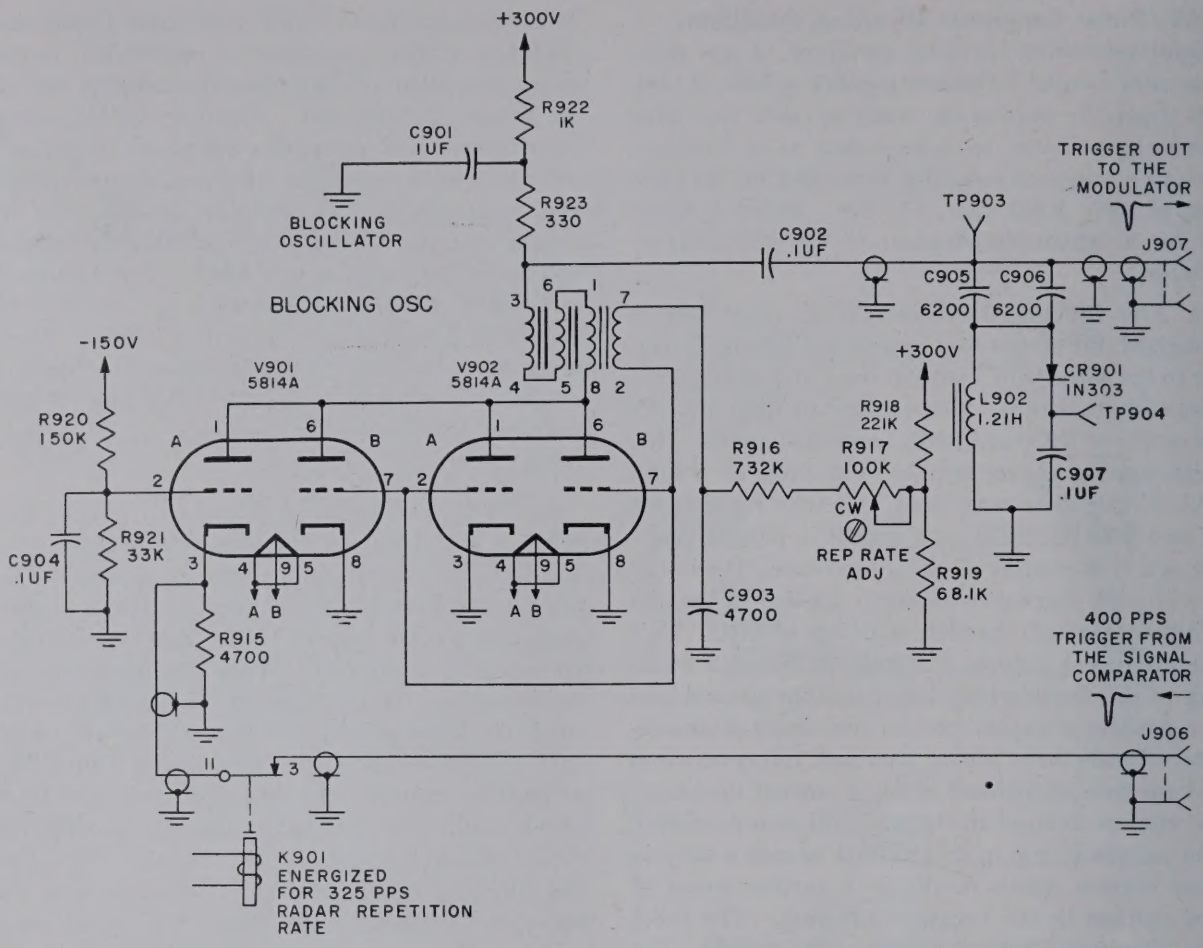

Figure 30. Blocking oscillator, schematic diagram.

preselector-amplifier. This regulated power supply (fig. 31) operates as follows:

a. The 115 volts at 400 cycles from the power supply of the radar set is applied across the primary of power transformer T901. This transformer supplies 6.3 volts ac for the preamplifier heaters and the filament and plate voltages for full-wave rectifier V903. Full-wave rectified pulsating direct current at the filament of V903 is passed through the ripple filter (L901 and C908) to the voltage regulating circuit. The voltage regulating circuit is designed to furnish a constant voltage of 150 volts. It consists of series regulator V904, control tube V905, and voltage regulator tube V906.

b. The control grid of V905 is maintained at a constant voltage with reference to the output voltage by V906. When the output voltage tends to increase, it will cause the current through V906 to increase. The resistance of V906 will decrease and the voltage across V906 will remain constant. The increased current will cause an increased voltage drop across R932 that will be greater than the increase in the cathode voltage felt across the voltage divider. This rising voltage across R932 on the V905 control grid causes an increase in V905 plate current. This rise in plate current causes a negative signal to be applied to the control grids of both halves of V904, thus increasing the plate resistance which lowers the output voltage. Thus, any tendency for the output voltage to rise is immediately offset by a change in the plate resistance of the series regulator. A similar but opposite reaction occurs when the output voltage tends to decrease. Resistors R929, R930, and R931 compromise a voltage divider network that fixes the cathode voltage of V905, with R930 being a variable resistor to adjust the output voltage about which regulation occurs. Resistor R931, and the portion of R930 through which V905 plate current flows, is bypassed

with capacitor C909. This capacitor prevents the voltage changes from appearing on V905 cathode with the resulting degenerative action. Resistor R926 is the plate load resistor for V905. Resistors R927 and R928 are grid current limiting resistors. Capacitor C910 is a bypass capacitor used to eliminate the effect of the noise voltages created by the gas ionization in V906.

47. Circuitry Added to Azimuth and Range Indicator IP–141/TPS–1D (fig. 50). *A. Marker Gate Multivibrator.* When RANGE SELECTOR switch S619 is turned to the 200-mile position, 200 MILE MARKER GATE potentiometer R2629 is added in series with the plate circuit of V614A. The additional resistance in this circuit increases the charging voltage on coupling capacitor C628 when V614A is triggered and, therefore, extends the cutoff period of V614B. Potentiometer R2629 is adjusted to permit display of the 200-mile marker.

b. Sweep Gate Multivibrator. When RANGE SELECTOR switch S619 is turned to the 200 mile position, 200-MILE GATE LENGTH potentiometer R2630 is connected in series with the discharge path of feedback capacitors C610 through C613. This additional resistance lengthens the RC time constant in the grid circuit of V603B and, therefore, causes the tube to remain cut off over a longer period. Potentiometer R2630 is adjusted to display a sweep just over 200 miles long.

c. Sweep Generator. RANGE SELECTOR switch S619, when in the 200 mile position, connects sweep capacitor C669 in parallel with C615. This extends the RC time constant of the sweep charging circuit consisting of R634 and C669 and C615 in parallel. The longer time constant provides the longer sweep necessary when the 200-mile range is used.

d. Intensity Compensator. RANGE SELECTOR switch S619C is used to select intensity compensation resistors that help to maintain a uniform sweep brightness at the different sweep speeds. When switched to the 200 mile position, S619C connects R2628 in the divider circuit that determined the dc voltage on the No. 1 grid of the ppi cathode-ray tube. This lowers the No. 1 grid voltage to compensate for the slower sweep speed.

e. Marker Selection. For the 200-mile sweep range, additional contacts are included on S619D

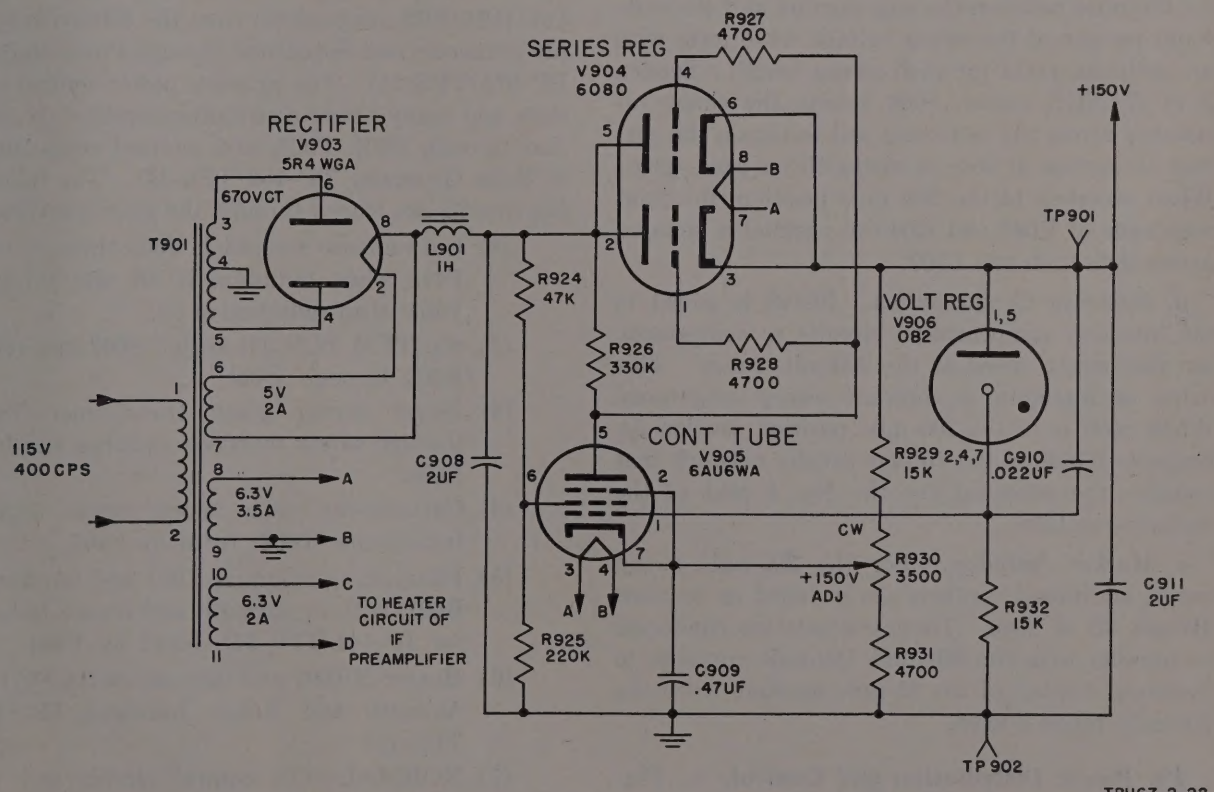

Figure 31. Regulated power supply, schematic diagram.

and S619E. These contacts are connected in parallel with the 80- and 160-mile contacts to facilitate display of the 25-mile markers when the 200-mile range is used.

48. Circuitry Added to Azimuth and Range Indicator IP–345/TPS–1D (fig. 47). *a.* Sweep *Gate Multivibrator.* When RANGE switch S606 is turned to the 200 mile position, 200-mile gate length potentiometer R1647 is connected in series with the timing resistors (R620, R621, and R622) that determine the cutoff period of V609 (the gate length). Potentiometer R1647 adds resistance to this RC circuit that extends the gate length for the 200-mile range. Potentiometer R1647 is adjusted to end the sweep just beyond the 200-mile range marker.

b. Sweep Generator. When RANGE switch S606 is turned to the 200-mile position, feedback capacitor C667 is connected into the sweep generator circuit. This capacitor, together with the associated resistance network, determines the slope of the grid voltage rise of sweep generator tubes V613 and V614 and, therefore, determines the sweep time.

c. Step to Sawtooth Ratio. The linearity of the sweep on the ppi cathode-ray tube is determined by the ratio between the step portion and the sawtooth portion of the sweep voltage wave form with an optimum ratio for each sweep length. Section 2 of RANGE switch S606 selects the shunt resistance across the deflection coil to obtain the correct proportion of step to sawtooth for each range. When switched to the 200 mile position, the joint resistance of R645 and R649 in parallel is shunted across deflection coil L609.

d. Intensity Compensation. R6148 is added to the intensity compensation circuits to compensate for slow sweep speed at the 200-mile range. This helps to maintain a constant sweep brightness. When S606 is in the 200-mile position, section 5A connects R1648 in the voltage divider network that supplies the potential for the No. 1 grid of the cathode-ray tube.

e. Marker Selection. For the 200-mile sweep range, additional contacts are included on sections 4B and 5B of S606. These contacts are connected in parallel with the 80- and 160-mile contacts to facilitate display of the 25-mile markers when the 200-mile range is used.

49. Power Distribution and Control. *a.* Figure 53 is a power distribution diagram showing the distribution and control of the 115-volt 400-cycle power and the 120- to 208-volt 60-cycle power in the complete radar that consists of modified Radio Set AN/TPS–1D cabled with Antenna Group OA–1124/FPS.

b. The 115-volt 400-cycle primary power is connected to J405 at Power Supply PP–674/TPS–1D and distributed through the components of the radar set in the same manner that it is distributed in unmodified Radio Set AN/TPS–1D. Circuit elements (symbol numbers in the 700 series (Antenna Base AB–221/TPS–1D)) do not appear in these diagrams because the 15-foot antenna is not used in this equipment. Pulse Generator TD–169/TPS–1D (symbol numbers in the 900 series) and Antenna Group OA–1124/FPS (symbol numbers in the 800 series) are new components shown in this diagram.

c. Power distributed in Antenna Group OA–1124/FPS is entirely 3-phase 60 cycle except that B803 is a 400-cycle synchro transmitter that transmits antenna position data to Azimuth and Range Indicator IP–141/TPS–1D. This synchro transmitter receives 400-cycle excitation voltage from the 400-cycle supply distributed through Power Supply PP–675/TPS–1D.

d. All components of the radar set Antenna Group OA–1124/FPS are powered from the 400-cycle supply connected and distributed through Power Supply PP–675/TPS–1D. The primary power control circuits and many power distribution circuits are carried through P904, P905, and internal connections of Pulse Generator TP–169/TPS–1D. The following circuits are looped through the pulse generator:

(1) Convenience receptacle J603 through fuse F416 when radiation is off and through F401 when radiation is on.

(2) SYSTEM POWER switch S602 and relay K402 through F402.

(3) Power supply plate transformer T402 through safety interlock switches and fuse F409.

(4) Cathode-ray tube anode power supply transformer T604; fused by F407.

(5) Filament transformer T601 and fan motor B601, both in Azimuth and Range Indicator IP–141/TPS–1D, fused by F404.

(6) Heater HR601 and thermal switch S611 in Azimuth and Range Indicator IP–141/TPS–1D.

(7) NORMAL-MTI control circuit and the radiate control circuit.

e. Figure 53③ shows the distribution and control of the 120-to-208-volt 3-phase power.

(1) Power is applied through fuses F804, F805, F806, F812, and F813 to the heating system consisting of immersion heaters HR811 and HR812, heating cables HR815 and HR816, heater assembly Z815 with blower B805, and speed reducer heater HR810 Thermal switches S808, S809, and S810, together with relay K807, control the operation of the heater assembly immersion heaters and the heating cable. The speed reducer heater is controlled by thermal switch S806.

(2) Convenience outlets J801 and J802 are supplied with 120 volts ac through fuse F808.

(3) Power is applied to the operation switching circuits (par. 44) and the antenna drive motor circuit (TM 11–5047) through fuse F807.

(4) The lubricating oil pump motor circuit (TM 11–5047) is supplied through fuses F809, F810, and F811.

CHAPTER 5

TROUBLE SHOOTING AND REPAIR

SECTION I. GENERAL INFORMATION

50. General. Detailed trouble shooting for Radar Set AN/FPS–36 is the same as that for Radio Set AN/TPS–1D with the exception of those troubles which are specifically connected with Antenna Group OA–1124/FPS and Azimuth and Range Indicator IP–345/TPS–1D. References are made to the appropriate manuals for detailed trouble shooting of components after the trouble has been sectionalized. This chapter gives system trouble-shooting information for Radar Set AN/FPS–36 and detailed trouble-shooting information for the new components of the radar set.

51. Trouble-shooting Steps. *a.* The first aim when trouble shooting the radar set is to determine whether the fault lies in the 40-foot antenna, the remote ppi, or in the other components. Study the symptoms carefully and refer to the appropriate manuals.

b. If the trouble is indicated in the 40-foot antenna, refer to the trouble-shooting chart in chapter 6, TM 11–5047. If the trouble is found to be in the remote ppi, refer to paragraph 71, TM 11–5112. Section 7 of TM 11–1167 gives trouble-shooting instructions for the various components of Radio Set AN/TPS–1D. Trouble-shooting information, particularly applicable to Radar Set AN/FPS–36 is given in this bulletin.

SECTION II. TROUBLE SHOOTING IN MODIFIED RADAR SET

52. Reference Data. The following reference data should be helpful in performing corrective maintenance on the components of Radar Set AN/FPS–36 not used with Radio Set AN/TPS–1D or a part of Antenna Group OA–1124/FPS.

Fig. No.	Title
21	Block diagram of signal input circuit.
29	Operation switching circuits, schematic diagram.
41	Pulse generator tube socket, voltage and resistance chart.
42	Pulse generator blocking oscillator voltage wave form.
43	If preamplifier tube socket voltage and resistance chart.
46	Radar Set AN/FPS–36, external cabling diagram.
47	Radar Set AN/FPS–36, synchro diagram.
48	Antenna Control C–1894/FPS, schematic diagram.
49	Radar Receiver-Transmitter RT–406/FPS–36 and Amplifier Filter Assembly AM–1570/TPS–1D, schematic diagram.
50	Azimuth and Range Indicator IP–405/FPS–36, schematic diagram.
51	Azimuth and Range Indicator IP–406/FPS–36, schematic diagram.
52	Pulse Generator TD–169/TPS–1D, schematic diagram.

53. System Trouble-Shooting Hints. When it is necessary to perform trouble shooting on Radar Set AN/FPS–36, refer to section 7 of TM 11–1167. Most of the trouble-shooting information given in this section is applicable to the radar set as modified and installed in a fixed location. Refer to the following trouble-shooting hints when performing the corrective maintenance procedures given in TM 11–1167.

a. When the modulator front panel TRIGGER switch is in the EXTERNAL position (normal operating condition), the radar trigger is supplied from the mti circuits in the signal comparator. At either the 325- or 400-pps repetition rate, this trigger passes through the pulse generator blocking oscillator. Therefore, when a trouble exists that indicates loss of, or a fault in, the radar set trigger, check the pulse generator blocking oscillator circuits for proper operation (par. 56).

b. Rotation of the 40-foot antenna can be started and stopped at either the pulse generator or the antenna control depending upon the position of the pulse generator LOCAL-REMOTE switch. If the 40-foot antenna does not start when the ANTENNA CONTROL switch is snapped to RUN, first be sure that the LOCAL-REMOTE switch is correctly positioned, and then refer to TM 11–5047.

c. The radar set, as modified for extended range use, operates at a repetition rate of 325 pps when used with a 200-mile-sweep range. This slower repetition rate is necessary to allow for the necessary recovery time in the indicator circuits for the longer sweep time. Therefore, if jittery or unsteady sweeps occur at the indicator when used on the 200-mile range, first be sure that the pulse generator LOCAL-REMOTE switch is positioned for the indicator used (par. 26); then check to see that the blocking oscillator is operating at 325 pps (par. 54).

d. The regulated power supply in the pulse generator furnishes the required dc voltage for operating the IF preamplifier in the preselector-amplifier. Therefore, a failure in the regulated power supply in the pulse generator may cause a loss of signals due to an inoperative IF preamplifier. Check for +150 volts at TP901 (fig. 33) at the pulse generator.

e. Received signals from the receiver waveguide transition are passed through the preselector before they are applied to the coaxial signal mixer. Therefore, loss of or weak echo signals can be caused by improper tuning of the preselector.

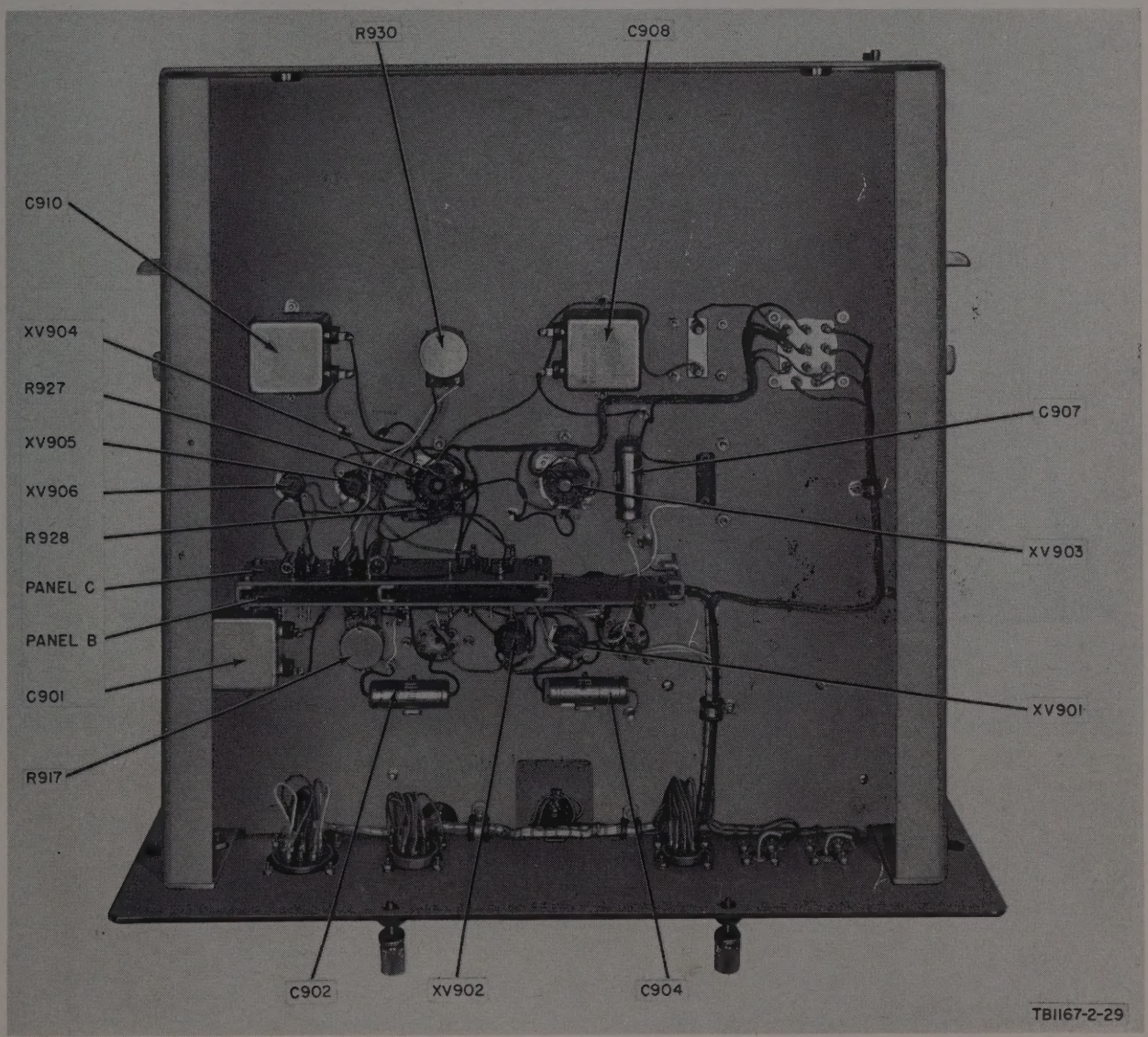

Figure 32. Pulse generator, under chassis, parts location.

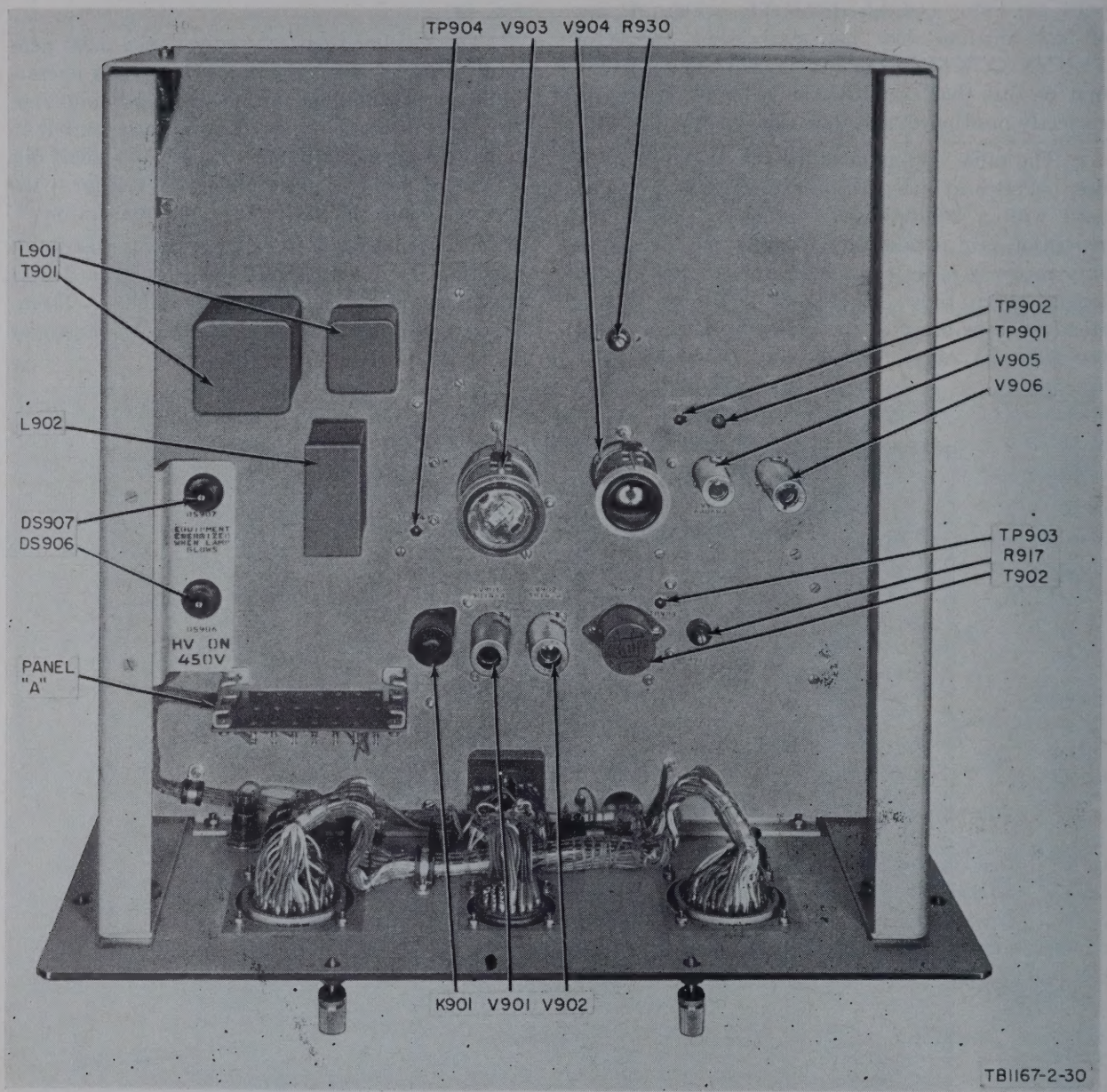

Figure 33. Pulse generator, top chassis, parts location.

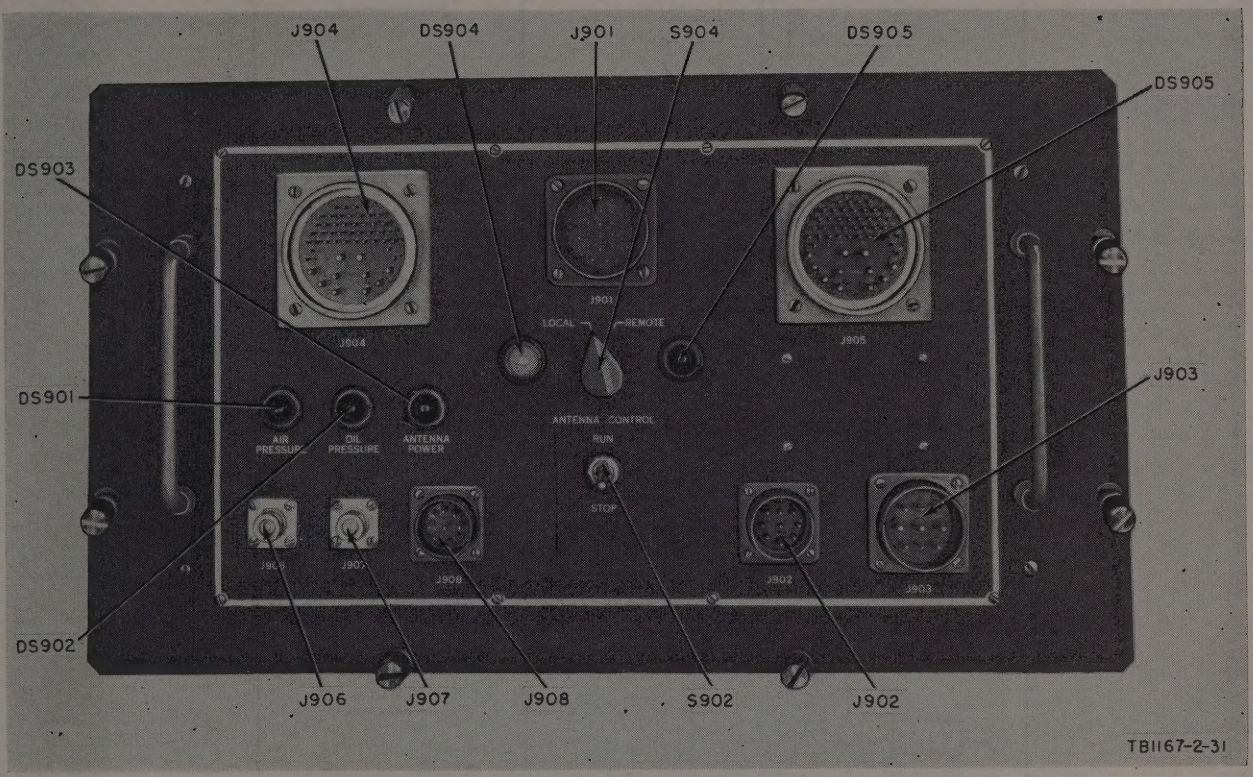

Figure 34. Pulse generator, front panel, parts location.

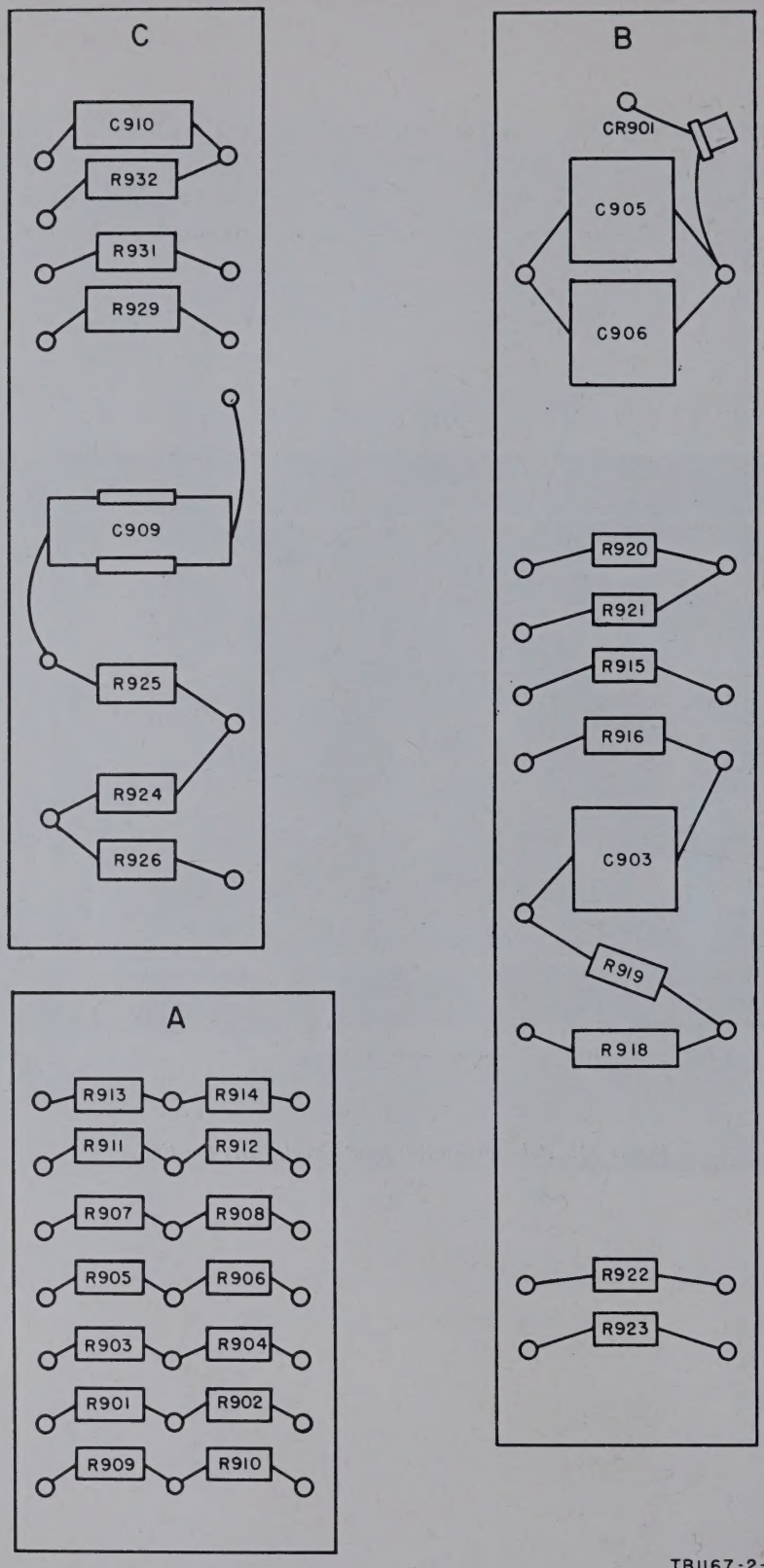

Figure 35. Pulse generator panels, parts location.

54. Adjustments to Radar Set AN/FPS–36, Components. The adjustment procedures given in this paragraph are supplementary to those given in the appropriate sections of TM 11–5047 and TM 11–1167.

a. Signal Mixer Local Oscillator Coupling. Use the following procedure instead of that given in paragraph 9*b*(2)(c) of section 7 in TM 11–1167.

(1) Observe SIGNAL meter M503 on the front panel of the pre-selector-amplifier (fig. 36).

(2) Turn the SIG ADJ control for red line reading on M503.

b. 200-Mile Gate Length at Local Indicator. Refer to paragraph 6*e* in section 7 of TM 11–1167 for the adjustments in Azimuth and Range Indicator IP–141/TPS–1D. Make the following adjustments in addition to those given in paragraph 6*e*(2) (PPI SWEEP GATE R626).

(1) With the antenna not rotating, set the PPI RANGE SELECTOR switch to the 200 mile position.

(2) Adjust SWEEP LENGTH R651 (fig. 7–21, TM 11–1167) so that the end of the ppi sweep can be seen.

(3) Adjust R2630 (fig. 39) so that the sweep extends slightly beyond 200 miles, as measured by the markers.

c. 200 Mile Marker Gate at Local Indicator. Refer to paragraph 6*e* in section 7 of TM 11–1167 for the adjustments in Azimuth and Range Indicator IP–141/TPS–1D. Make the following adjustments in addition to those given in paragraph 6*e*(13) (MARKER GATE R691).

(1) Set the PPI RANGE SELECTOR switch to the 200-mile position.

(2) Turn the RANGE MARKS MILES switch to the TEST position.

(3) Adjust 200 MI MARKER GATE R2629

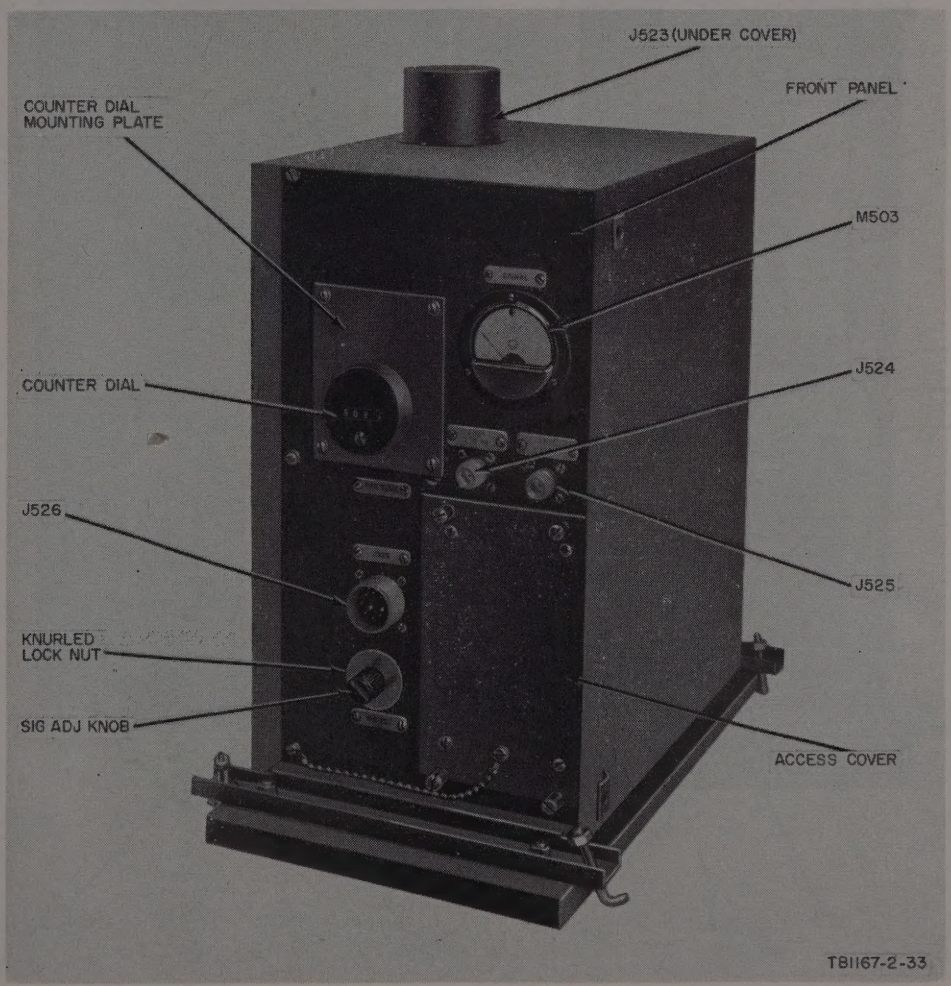

Figure 36. Preselector-amplifier, front panel, parts location.

(fig. 39) so that the 200-mile marker is displayed on the sweep.

d. Pulse Generator Repetition Rate Adjustment. The purpose of this adjustment is to fix the free-running frequency of the blocking oscillator in the pulse generator to 325 ±10 pps.

(1) With the LOCAL-REMOTE switch in the LOCAL position, turn the local indicator PPI RANGE SELECTOR switch to the 200-mile position. This changes the blocking oscillator to a self-running oscillator.

(2) Connect a 20,000 ohm-per-volt meter between TP904 (fig. 33) and ground; use a 2.5-volt dc scale.

(3) Adjust R917 (fig. 33) for maximum positive dc voltage at TP904 (less than 1 volt).

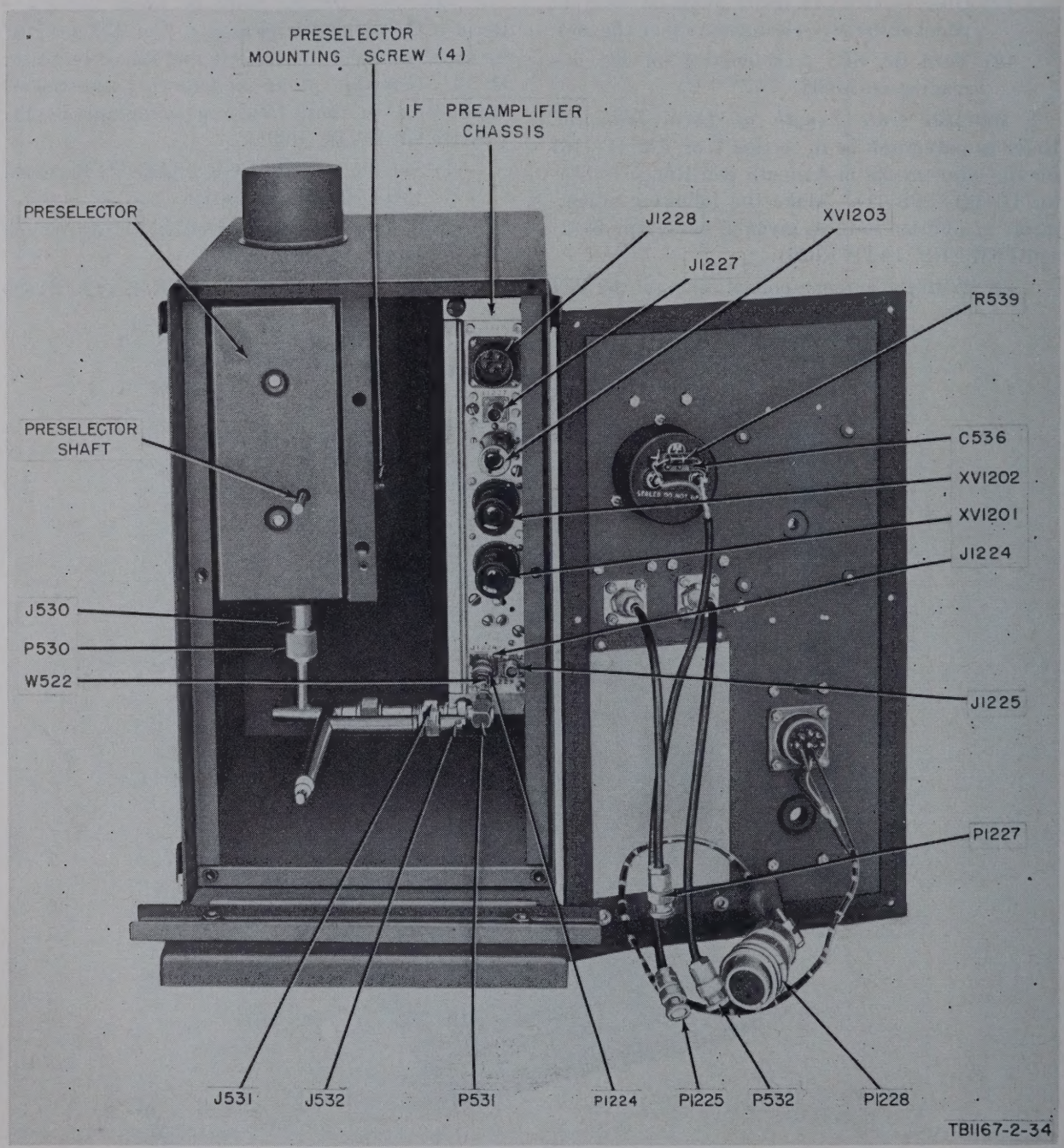

Figure 37. Preselector-amplifier, interior parts locations.

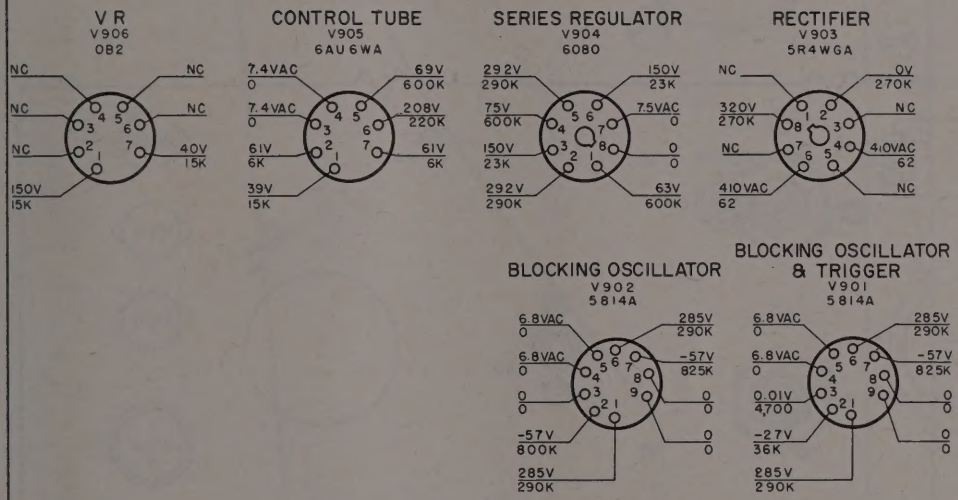

FRONT

NOTES:

1. ALL READINGS MEASURED TO CHASSIS WITH 20,000 OHMS-PER-VOLT METER.
2. VOLTAGES ARE POSITIVE DC UNLESS OTHERWISE SPECIFIED.
3. RESISTANCE MEASUREMENTS ARE TAKEN WITH EXTERNAL CABLES DISCONNECTED.
4. VOLTAGE READINGS ABOVE LINE, RESISTANCE READINGS BELOW LINE.
5. NC DENOTES NO CONNECTION.
6. VOLTAGE READINGS TAKEN WITHOUT EXTERNAL TRIGGER.

TB1167-2-35

Figure 38. IF preamplifier, under chassis, parts location.

This setting is broad and should be left about halfway between the two points where the voltage decreases perceptibly.

55. Adjustments to Azimuth and Range Indicator IP–406/FPS–36. *a. General* The adjustment procedure given in this paragraph is to be used instead of that given in paragraph 17*e*, TM 11–5112.

b. Gate Length Adjustment. With a trigger input from the master radar and the circuits of the remote ppi energized, proceed as follows:

(1) Place the RANGE switch in the 80 position, and display 10-mile markers.

(2) Adjust 80-mile gate length control R622 (fig. 47, TM 11–5112 as located by C 1, TM 11–5112, 5 March 1956), so that the sweep ends just beyond the 80-mile marker.

(3) Turn the RANGE switch to the 160 position, and turn up the MARKERS control (if necessary) to display the range markers.

(4) Adjust 160-mile gate length control R621 (fig. 40) so that the sweep ends just beyond the 160 mile marker.

(5) Turn the RANGE switch to the 200 position, and display the range markers.

(6) Adjust 200-mile gate length control R1647 (fig. 40) so that the sweep ends just beyond the 200-mile marker.

56. Trouble Shooting in Pulse Generator. *Symptom A.* When the LOCAL-REMOTE switch

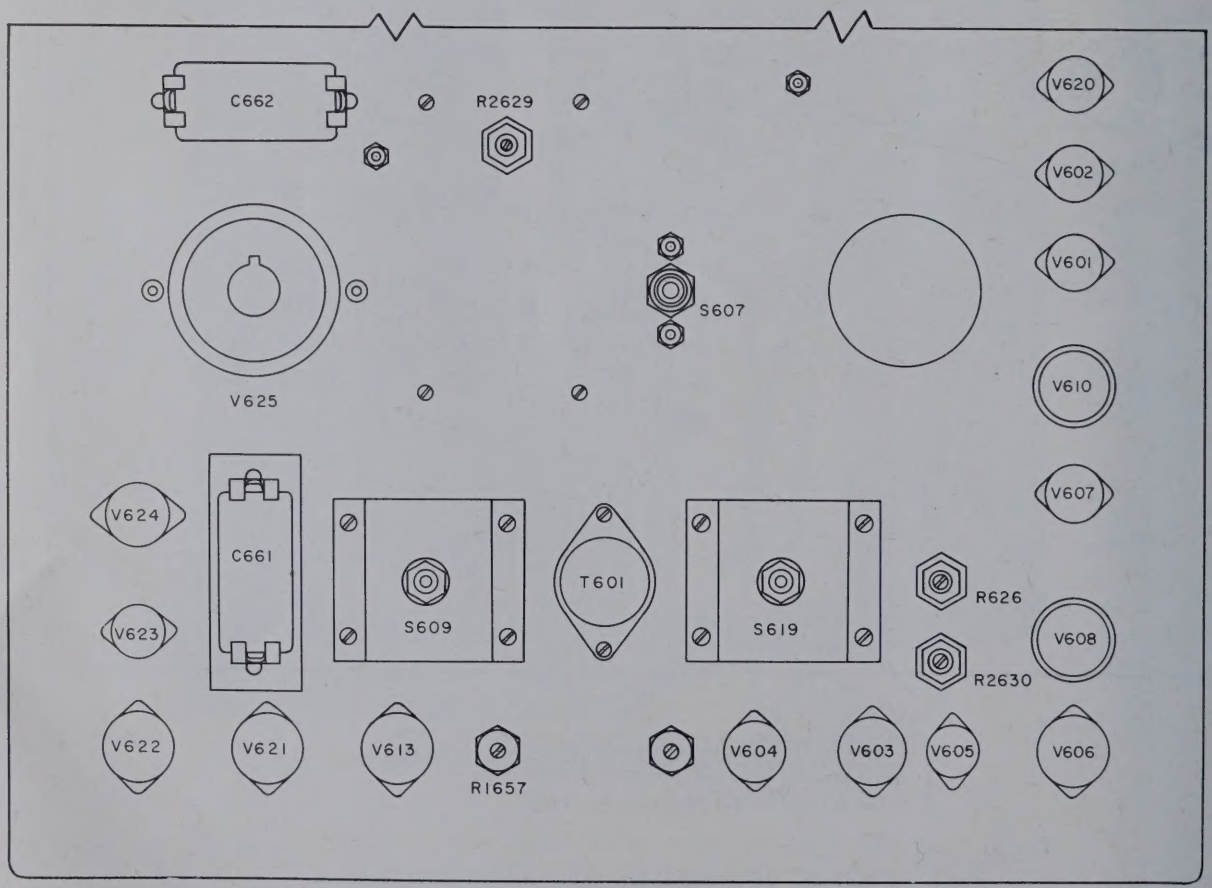

Figure 39. Location of parts added to Azimuth and Range Indicator IP–141/TPS–1D.

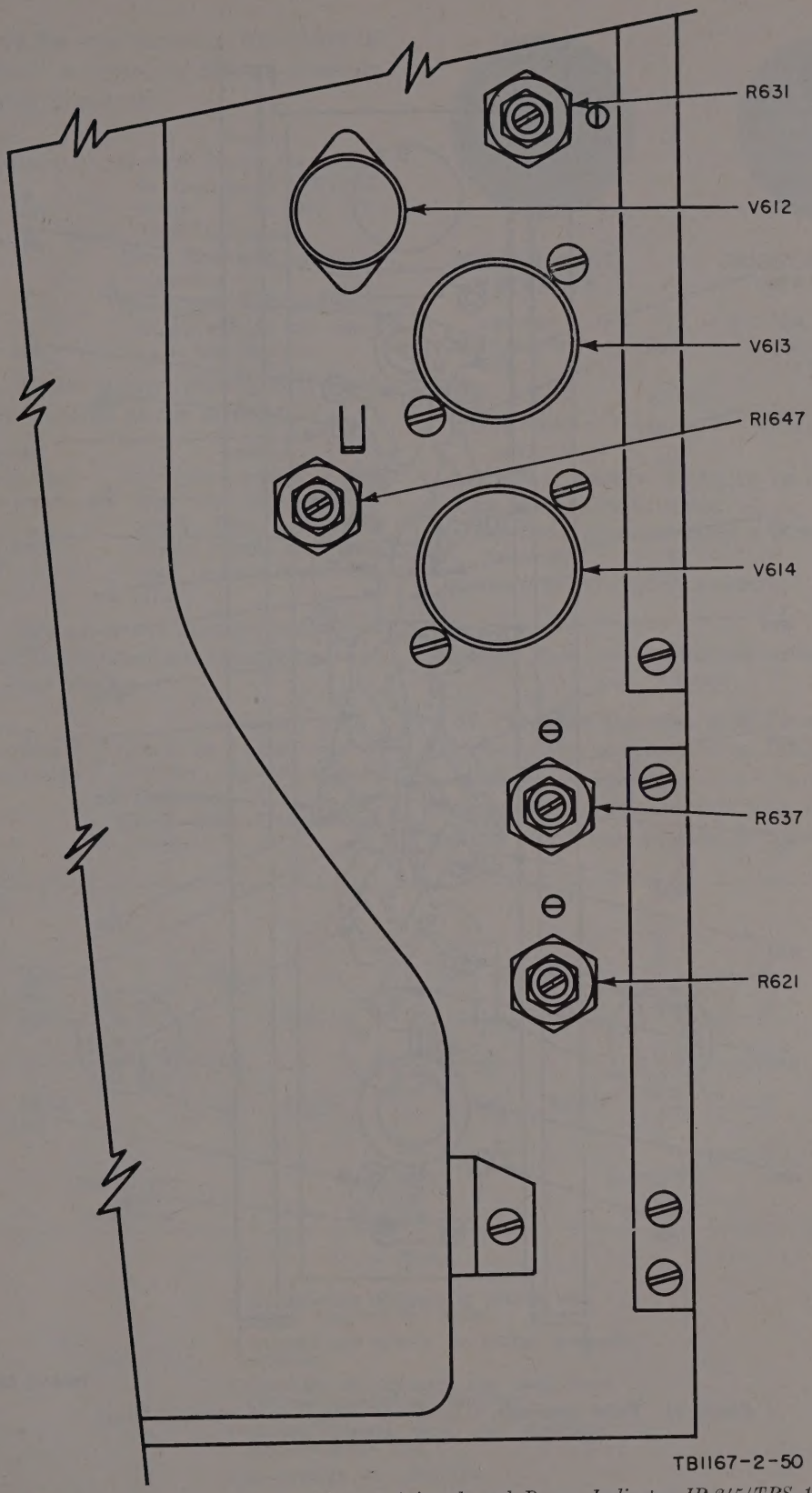

Figure 40. Location of parts added to Azimuth and Range Indicator IP-345/TPS-1D.

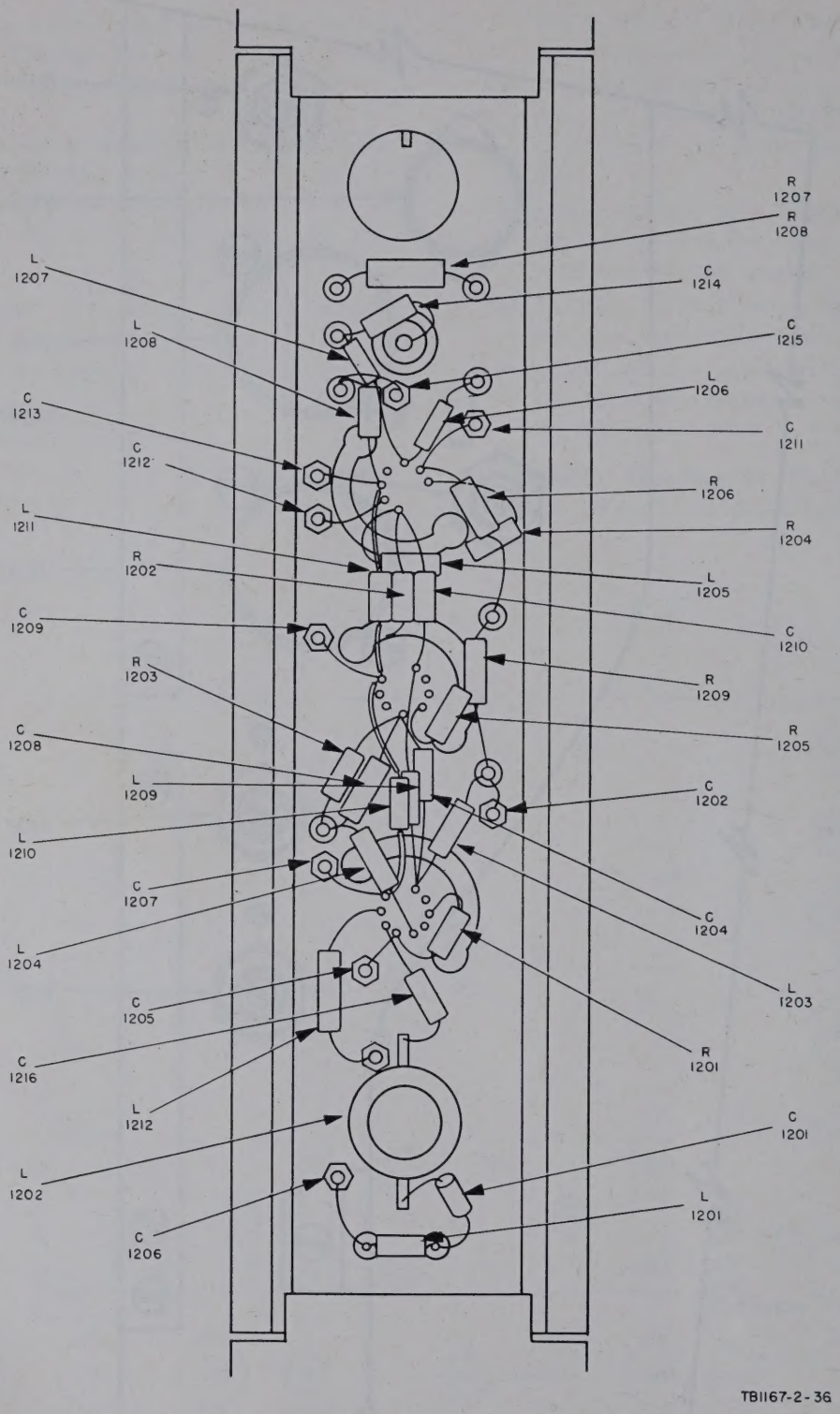

Figure 41. Pulse generator, tube socket voltage and resistance chart.

is at LOCAL and the local indicator PPI RANGE SELECTOR switch is turned to 200, an unsteady or jittery sweep is displayed.

Probable cause	*Procedure*
Radar pulse repetition rate is too high.	Check to see that the modulator front panel TRIGGER switch is in the EXTERNAL position. Check relay K901 for proper operation. Check tubes V901 and V902. Check voltage and resistance chart (fig. 41).

Symptom B. Radar set not pulsing, and check reveals no trigger at J153 at the modulator.

Probable cause	*Procedure*
Inoperative blocking oscillator at the pulse generator.	Check wave form at TP903 (fig. 42). If no trigger, check V901 and B902. Check voltage and resistance measurements (fig. 41).

Symptom C. Loss of or weak signals, and check of IF preamplifier in the preselector-amplifier shows zero or low dc plate voltages.

Probable cause	*Procedure*
Fault in regulated power supply in pulse generator.	Check for +150 volts at TP901, (fig. 33) at pulse generator. Check tubes V903 through V906.

TRIGGER INPUT V901 PIN 3

V.M.100
SW.R .5-5
V45

TRIGGER OUTPUT TP903

V.M.100
SW.R .5-5
V43

NOTES:

1. WAVE FORMS TAKEN WITH OSCILLOSCOPE AN/USM-24.
2. EXTERNAL TRIGGER IS APPLIED TO J906.
3. V.M. DENOTES V MULTIPLIER.
4. SW.R DENOTES SWEEP RANGE IN MICROSECONDS PER INCH.
5. V DENOTES PEAK-TO-PEAK VOLTS.

TB1167-2-37

Figure 42. Pulse generator blocking oscillator, voltage wave forms.

57. Trouble Shooting in IF Preamplifier. The IF preamplifier is a fixed-tuned, nonadjustable, low-noise amplifier operating at the 60-mc intermediate frequency. Trouble in this unit is indicated by weak or loss of echo signals. If trouble is suspected,

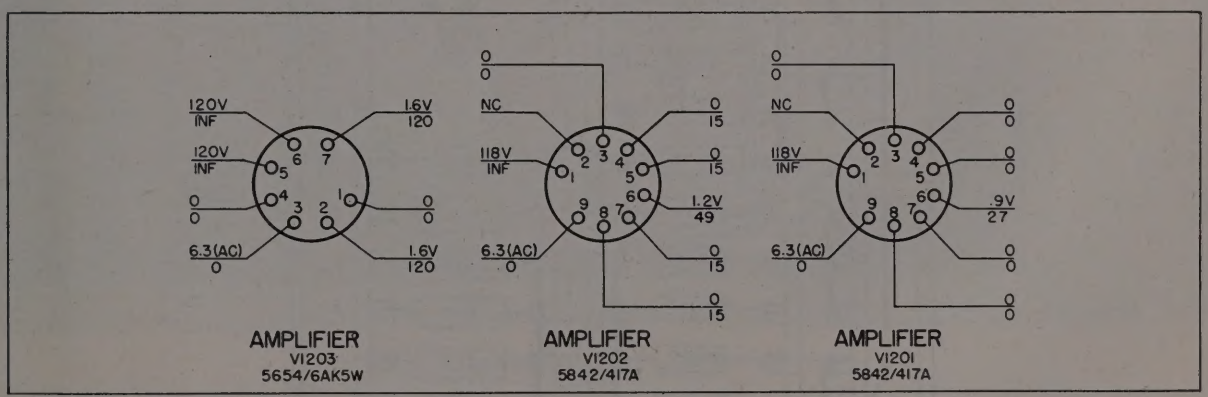

NOTES:

1. ALL READINGS MEASURED TO CHASSIS WITH 20,000 OHMS-PER-VOLT METER.
2. VOLTAGES ARE POSITIVE DC UNLESS OTHERWISE SPECIFIED.
3. RESISTANCE MEASURMENTS ARE TAKEN WITH EXTERNAL CABLES DISCONNECTED.
4. VOLTAGE READINGS ABOVE LINE, RESISTANCE READINGS BELOW LINE.
5. NC DENOTES NO CONNECTION.

TB1167-2-38

Figure 43. IF preamplifier, tube socket voltage and resistance chart.

check electron tubes V1201, V1202, and V1203 and make voltage and resistance checks (fig. 43).

58. Replacement of Parts. To obtain access to the IF preamplifier chassis, the detail parts mounted on the chassis, and the parts of the signal mixer and the preselector, remove the front panel from the preselector-amplifier (figs. 36 and 37). To dismount the preselector-amplifier front panel, proceed as follows:

a. Set the PRETUNE dial to 4975.

b. Remove the slotted screw plug and insert a .05-inch Allen set screw wrench (for No. 4-40 set screws) into the set screw hole at the top of the counter dial. Loosen the set screws.

c. Turn the PRETUNE dial to 5,000.

d. Remove the slotted screw plug that is now at the top of the counter dial and loosen the other set screw.

e. Loosen and remove the four machine screws and dismount the counter dial mounting plate from the front panel. Do not permit the preselector shaft to rotate.

f. Loosen the two set screws and remove the knob from the SIG ADJ shaft.

g. Remove the retainer spring and dismount the knurled lock nut from the SIG ADJ shaft.

h. Loosen and remove the seven machine screws and carefully dismount the front panel from the preselector-amplifier case. Do *not* move the preselector shaft (PRETUNE) or the preselector calibration will be wrong when the counter dial is reinstalled.

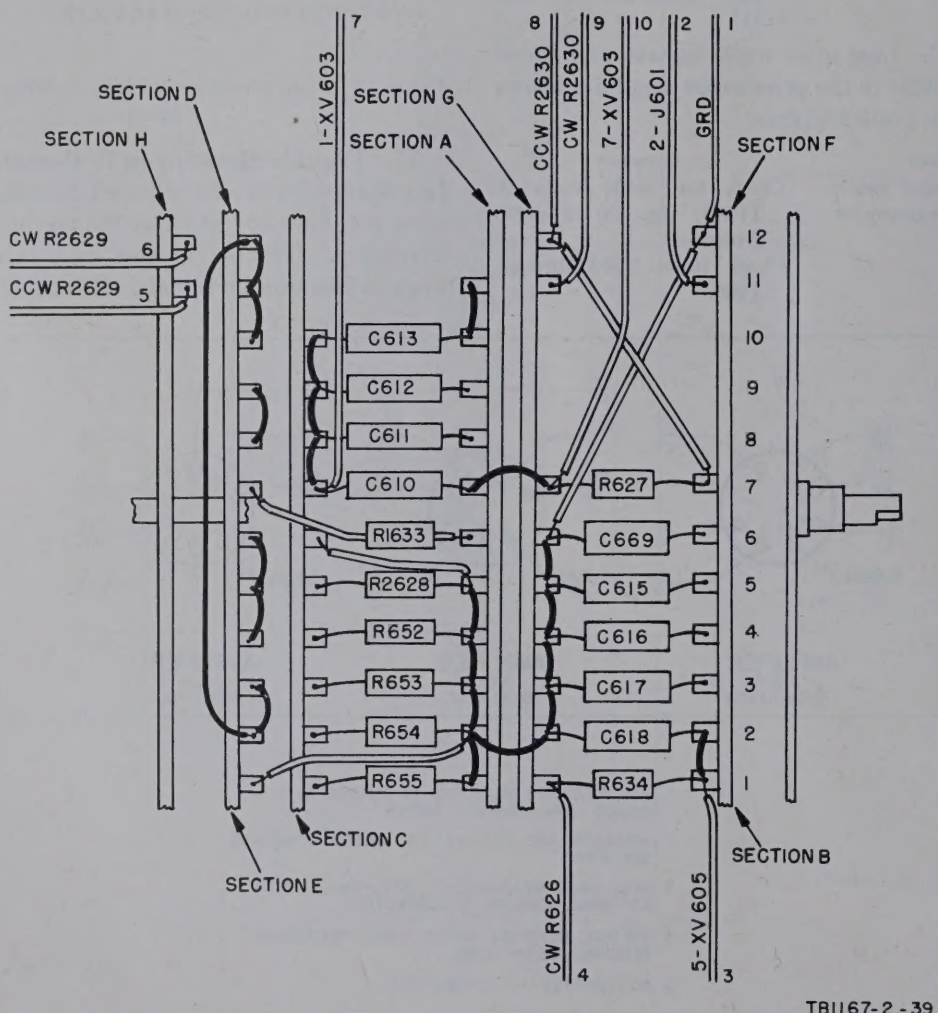

Figure 44. Resistors and capacitors mounted on modified local indicator range switch.

i. Disconnect plugs P1225, P532, P1223, and P1227 from the jacks on the IF preamplifier and the mixer assembly.

j. To dismount the IF preamplifier chassis, loosen the four captive screws.

k. If it is necessary to dismount the preselector, loosen and remove the four preselector mounting screws at the right-hand side of the preselector (fig. 37).

l. When the parts of the preselector-amplifier are reassembled, do not change the position of the preselector shaft. When reassembling the counter dial onto the preselector shaft, be sure the counter is set at 5,000, then tighten the set screw. Turn the counter to 4975, then tighten the other set screw. Replace the two slotted screw plugs into the set screw holes.

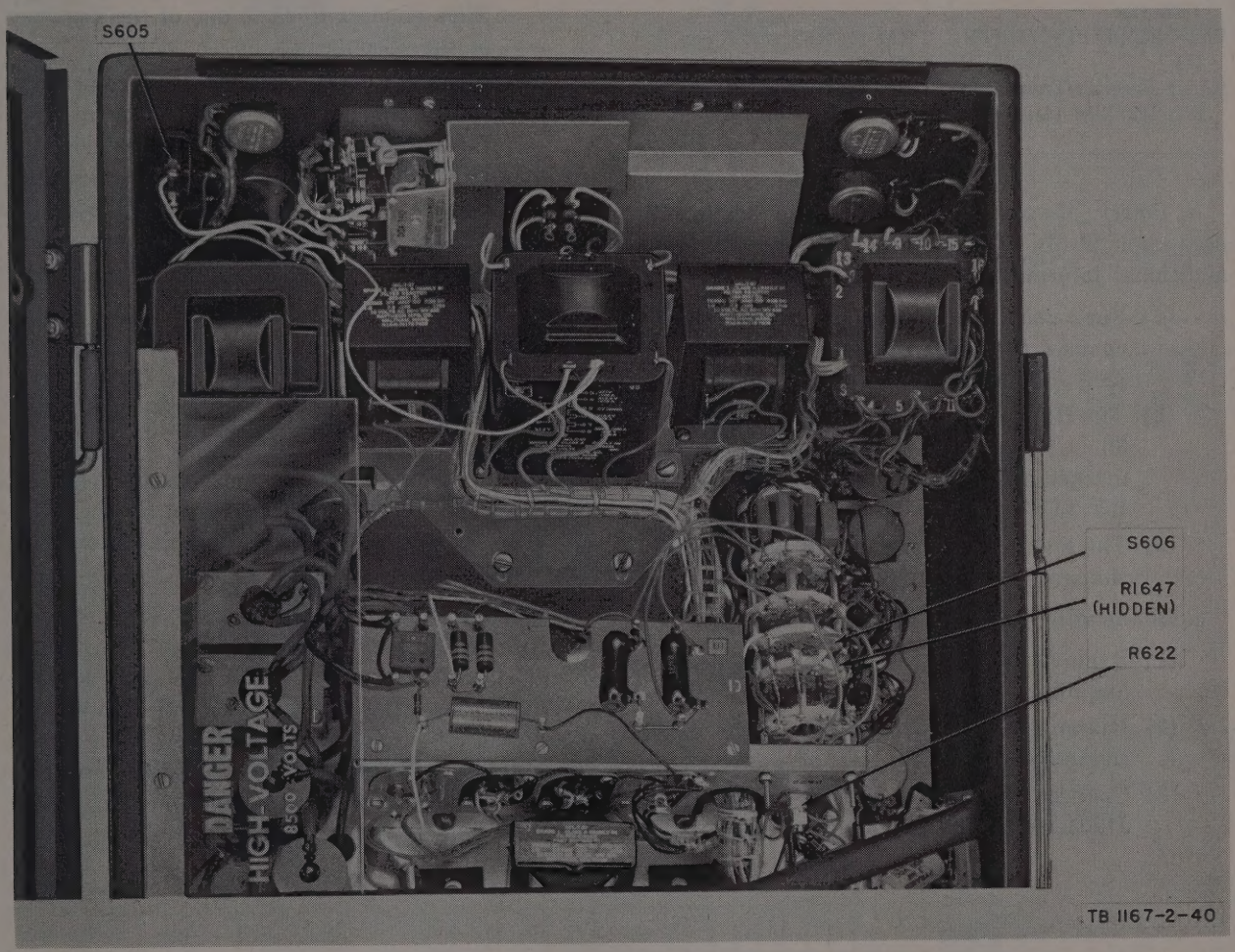

Figure 45. Modified remote ppi, parts location.

Section III. FINAL TESTING

59. General. This section refers to certain performance standards that should be obtained with the modified radar set. Most of the applicable standards are given in section 7, TM 11–1167; paragraph 75, TM 11–5112; and paragraph 63, TM 11–5047. The information given in this section is supplementary to that given in those manuals.

60. Final Tests. *a. Overall Tests.* The final tests for Radar Set AN/FPS–36 are covered in this paragraph. Listed below are the tests for the radar set and where information on these tests can be found. Subparagraphs *b* through *e* below give final tests that are peculiar to the new components or are changed because of modifications to circuitry.

Component	Publication
Azimuth and Range Indicator IP–345/TPS–1D.	TM 11–5112, par. 75.
Antenna Group OA–1124....	TM 11–5047, par. 56.
Test equipment.....	TM 11–1167, sec. 7, par. 2.
Radar Modulator MD–144/TPS–1D.	TM 11–1167, sec. 7, par. 5.
Azimuth and Range Indicator IP–141/TPS–1D.	TM 11–1167, sec. 7, par. 6.
Signal Comparator CM–36/TPS–1D.	TM 11–1167, sec. 7, par. 7.
Power Supply PP–674/TPS–1D.	TM 11–1167, sec. 7, par. 8.
Radar Receiver-Transmitter RT–212/TPS–1D.	TM 11–1167, sec. 7, par. 9.

b. Power Measurements. Refer to section 7, paragraph 9*b*(3), TM 11–1167 and the following additional information:

(1) For a good approximation of power output, connect the test instrument to RF TEST jack J533 at the directional coupler.

(2) The RF pulse sample at J533 is attenuated 30 ±1 db with the actual attenuation marked on the directional coupler near the RF TEST jack.

(3) The nominal average output power is unchanged by the radar set modification.

c. Bandwidth Check of IF Preamplifier.

(1) Remove the cover from the preselector-amplifier.

(2) Disconnect P531 from J531; leave W522 connected to J1224.

(3) Connect the output of the TS–452/U to J1224 on the IF preamplifier through the mixer simulator (TM 11–1167, fig. 7–79) and W522 in that order.

Note. The mixer simulator should be made as shown in figure 7–79, TM 11–1167, except that the 345-ohm, ½-watt resistor should be replaced with a 680-ohm ½-watt resistor and the 13-μμf capacitor should be replaced with two 7-μμf capacitors in parallel.

(4) Disconnect P525 on cable W5A from J525 and connect a UG–28A/U T-fitting to J525. Then connect P525 to one of the branches of the T-connector.

(5) Connect the traveling detector probe to the other branch of the T as shown in figure 7–80, TM 11–1167; use clip leads and a UG–204A/U or other suitable connector. Connect the traveling probe cable to the TS–452/U vertical amplifier input.

(6) Proceed as outlined in paragraph 9*b*(2)(*f*)1g through o in TM 11–1167.

(7) The bandwidth should be approximately 4 mc at the 3-db point at a center frequency of approximately 59 megacycles.

d. Gain Check of IF Preamplifier. Proceed as outlined in paragraph 9*b* (2)(*f*)2 except in step c, substitute a UG–204A/U in place of the UG–290/U. The gain of the preamplifier should be between 26 and 40 db.

e. Pulse Generator. Observe the wave form (fig. 42) with a test oscilloscope at TP903 (fig. 33) in the pulse generator in both the 325- and 400-pps repetition rate (par. 57*b*). The test oscilloscope should show a negative pulse of not less than 40 volts amplitude. The change in repetition rate from 400 to 325 should not change the shape of the pulse except to make it slightly larger in amplitude.

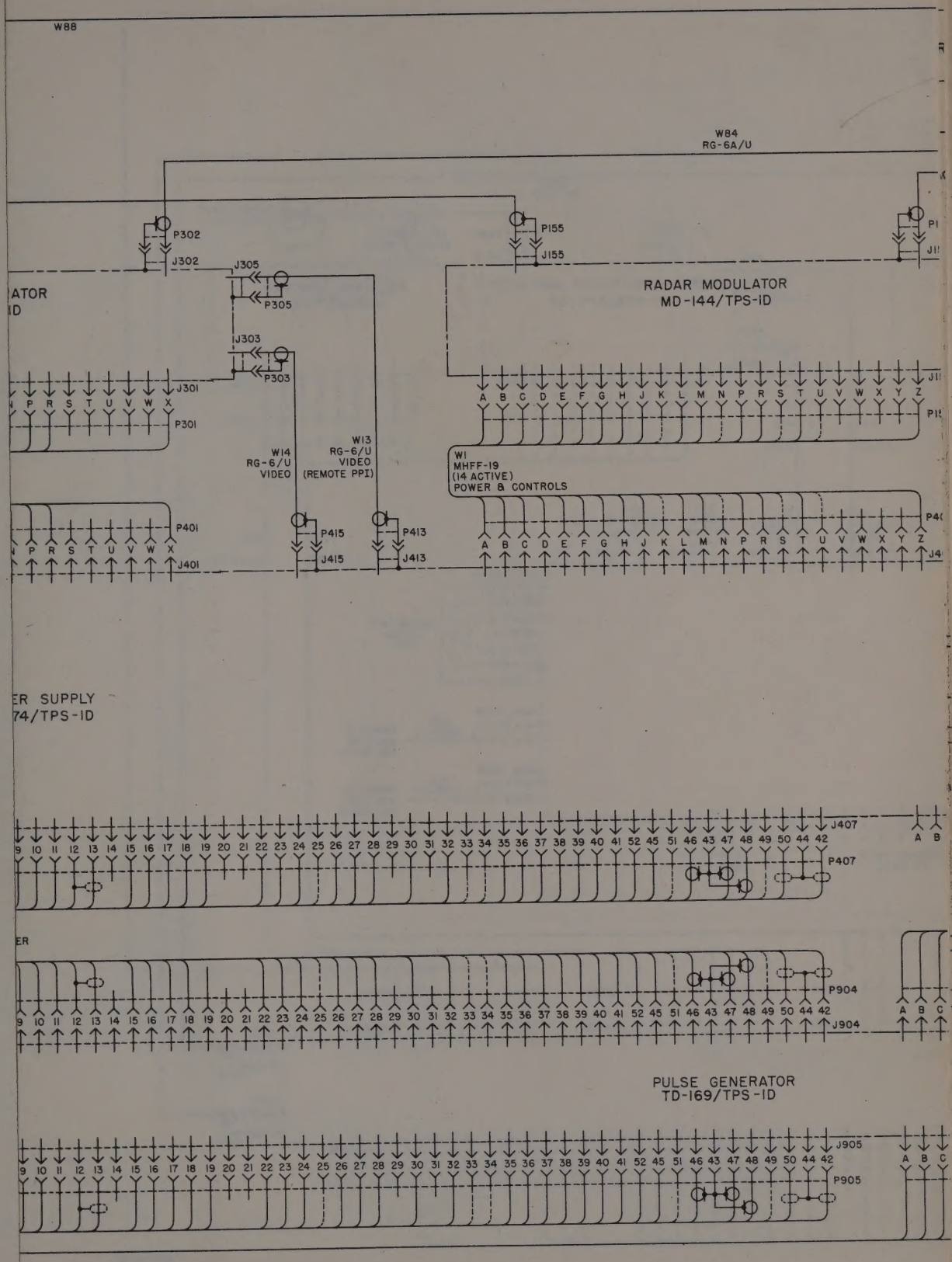

PS-36, external cabling diagram.

Component	Publication
Azimuth and Range Indicator IP–345/TPS–1D.	TM 11–5112, par. 75.
Antenna Group OA–1124. . . .	TM 11–5047, par. 56.
Test equipment.	TM 11–1167, sec. 7, par. 2.
Radar Modulator MD–144/TPS–1D.	TM 11–1167, sec. 7, par. 5.
Azimuth and Range Indicator IP–141/TPS–1D.	TM 11–1167, sec. 7, par. 6.
Signal Comparator CM–36/TPS–1D.	TM 11–1167, sec. 7, par. 7.
Power Supply PP–674/TPS–1D.	TM 11–1167, sec. 7, par. 8.
Radar Receiver-Transmitter RT–212/TPS–1D.	TM 11–1167, sec. 7, par. 9.

b. Power Measurements. Refer to section 7, paragraph 9*b*(3), TM 11–1167 and the following additional information:

(1) For a good approximation of power output, connect the test instrument to RF TEST jack J533 at the directional coupler.

(2) The RF pulse sample at J533 is attenuated 30 ±1 db with the actual attenuation marked on the directional coupler near the RF TEST jack.

(3) The nominal average output power is unchanged by the radar set modification.

c. Bandwidth Check of IF Preamplifier.

(1) Remove the cover from the preselector-amplifier.

(2) Disconnect P531 from J531; leave W522 connected to J1224.

(3) Connect the output of the TS–452/U to J1224 on the IF preamplifier through the mixer simulator (TM 11–1167, fig. 7–79) and W522 in that order.

Note. The mixer simulator should be made as shown in figure 7–79, TM 11–1167, except that the 345-ohm, ½-watt resistor should be replaced with a 680-ohm ½-watt resistor and the 13-μμf capacitor should be replaced with two 7-μμf capacitors in parallel.

(4) Disconnect P525 on cable W5A from J525 and connect a UG–28A/U T-fitting to J525. Then connect P525 to one of the branches of the T-connector.

(5) Connect the traveling detector probe to the other branch of the T as shown in figure 7–80, TM 11–1167; use clip leads and a UG–204A/U or other suitable connector. Connect the traveling probe cable to the TS–452/U vertical amplifier input.

(6) Proceed as outlined in paragraph 9*b*(2)(*f*)1g through o in TM 11–1167.

(7) The bandwidth should be approximately 4 mc at the 3-db point at a center frequency of approximately 59 megacycles.

d. Gain Check of IF Preamplifier. Proceed as outlined in paragraph 9*b* (2)(*f*)2 except in step c, substitute a UG–204A/U in place of the UG–290/U. The gain of the preamplifier should be between 26 and 40 db.

e. Pulse Generator. Observe the wave form (fig. 42) with a test oscilloscope at TP903 (fig. 33) in the pulse generator in both the 325- and 400-pps repetition rate (par. 57*b*). The test oscilloscope should show a negative pulse of not less than 40 volts amplitude. The change in repetition rate from 400 to 325 should not change the shape of the pulse except to make it slightly larger in amplitude.

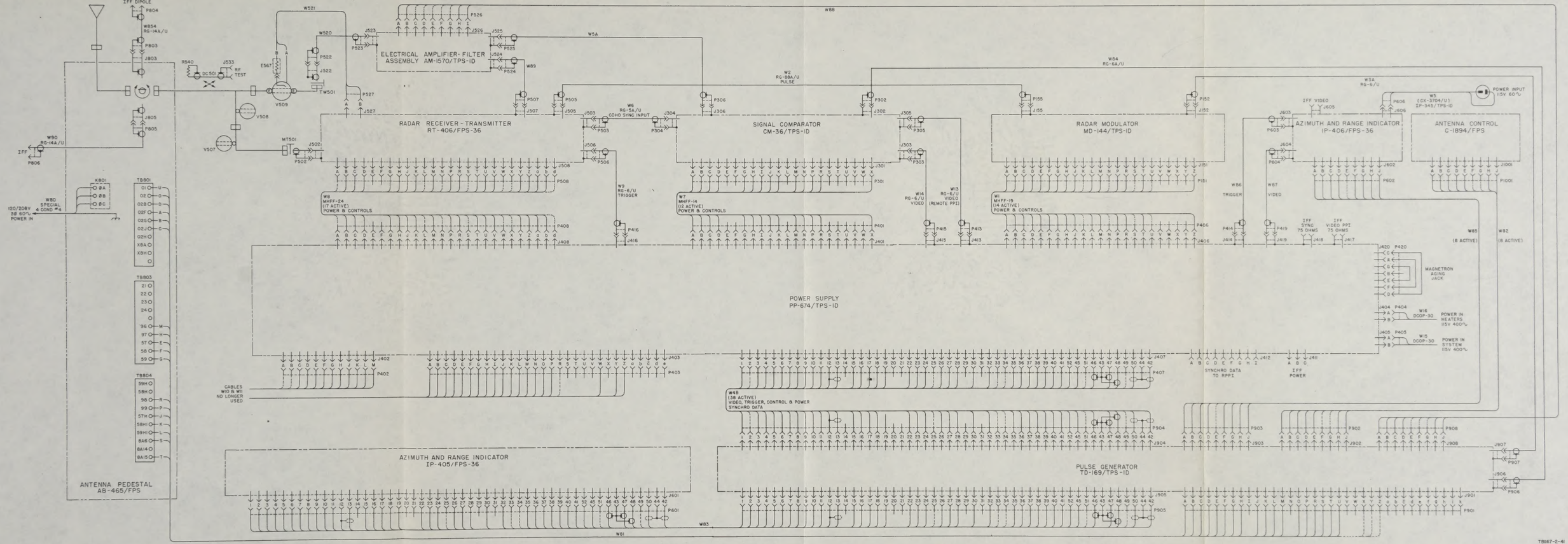

Figure 46. Radar Set AN/FPS-36, external cabling diagram.

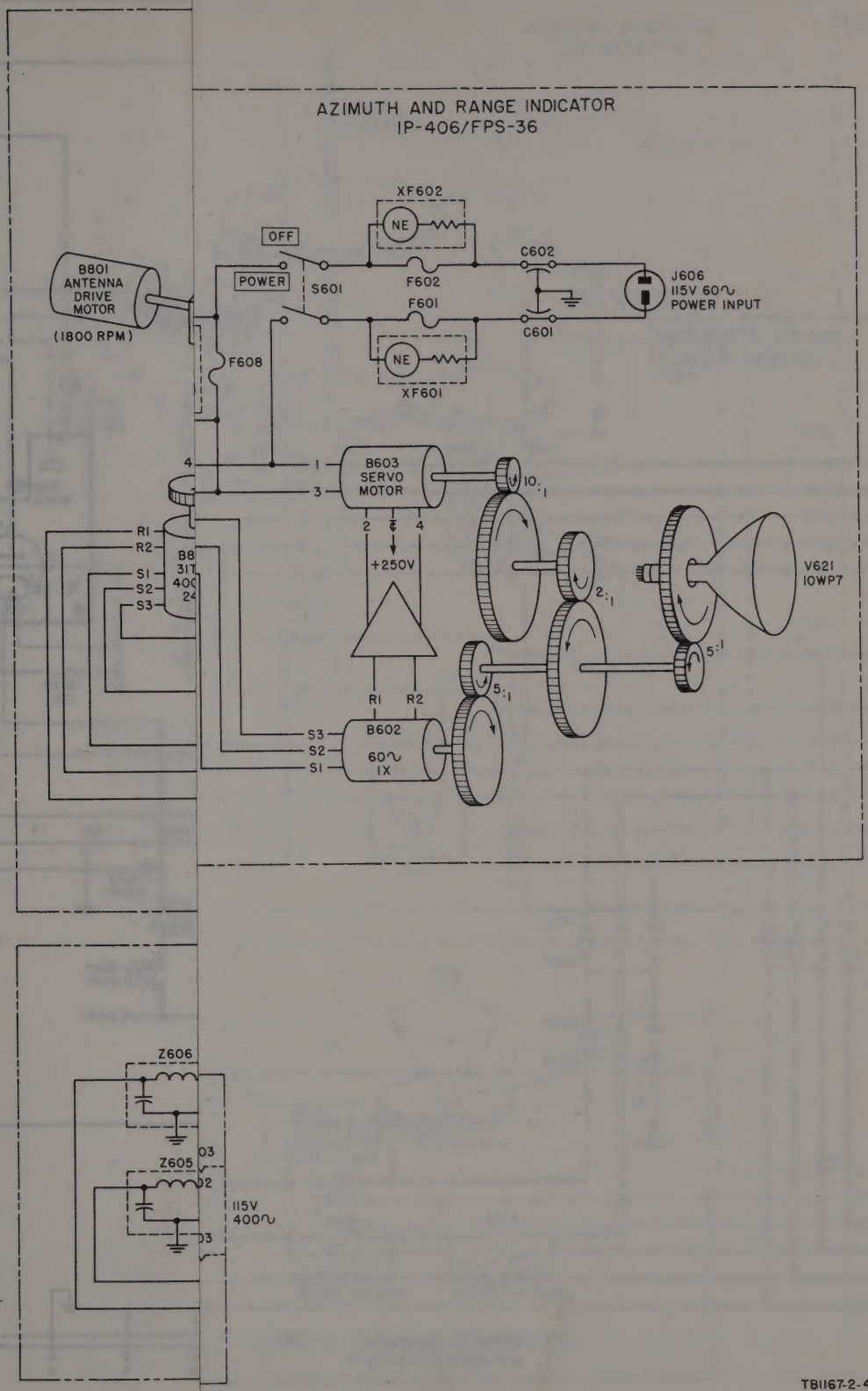
AZIMUTH AND RANGE INDICATOR
IP-406/FPS-36
XF602
NE
OFF
POWER
S601
F602
C602
J606
115V 60~
POWER INPUT
B801
ANTENNA
DRIVE
MOTOR
(1800 RPM)
F601
C601
F608
NE
XF601
B603
SERVO
MOTOR
10:1
+250V
2:1
5:1
5:1
V621
10WP7
R1
R2
S1
S2
S3
B602
60~
1X
Z606
Z605
115V
400~

TB1167-2-43

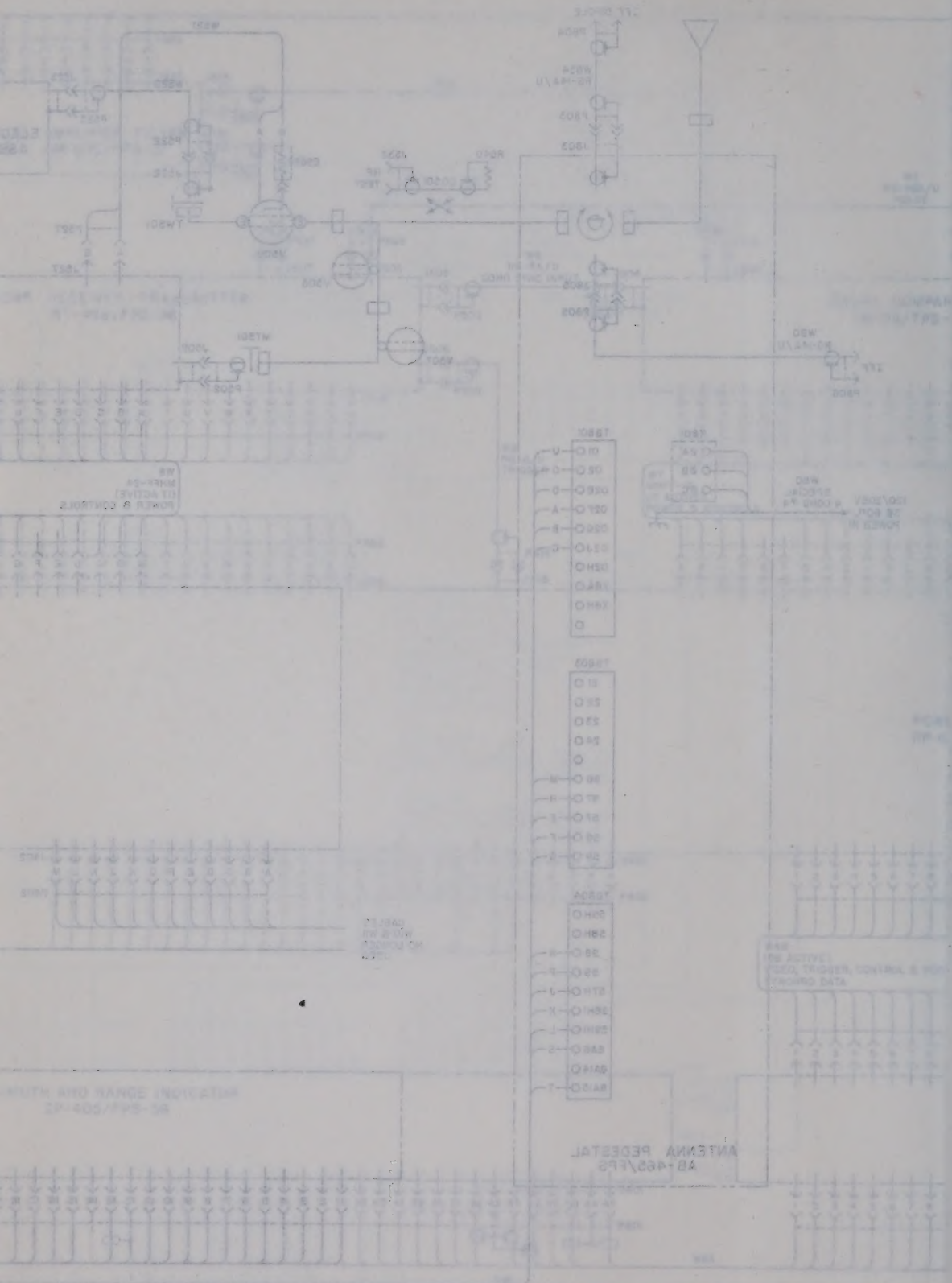
ANTENNA PEDESTAL
AB-465/FPS

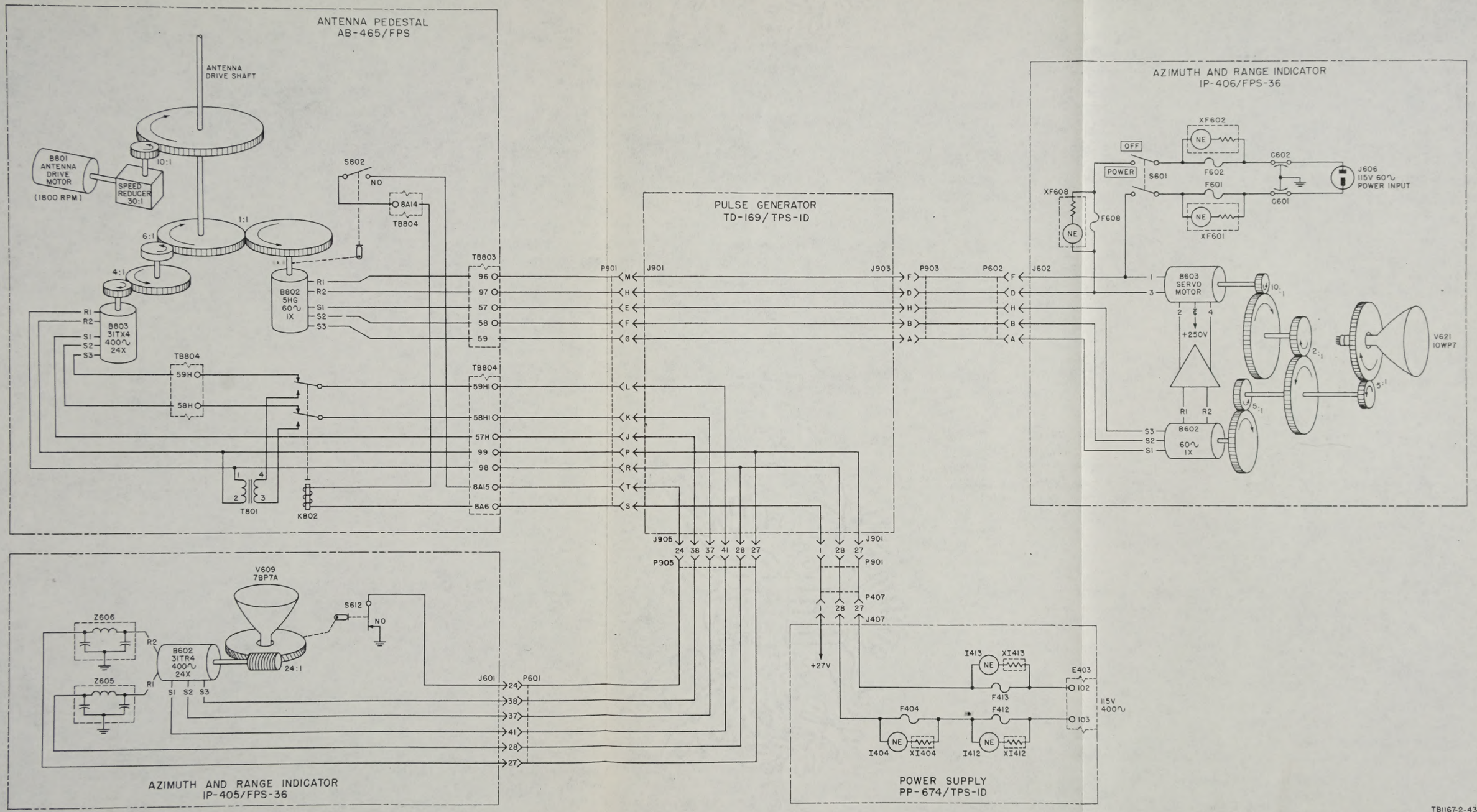

Figure 47. Radar Set AN/FPS-36, synchro diagram.

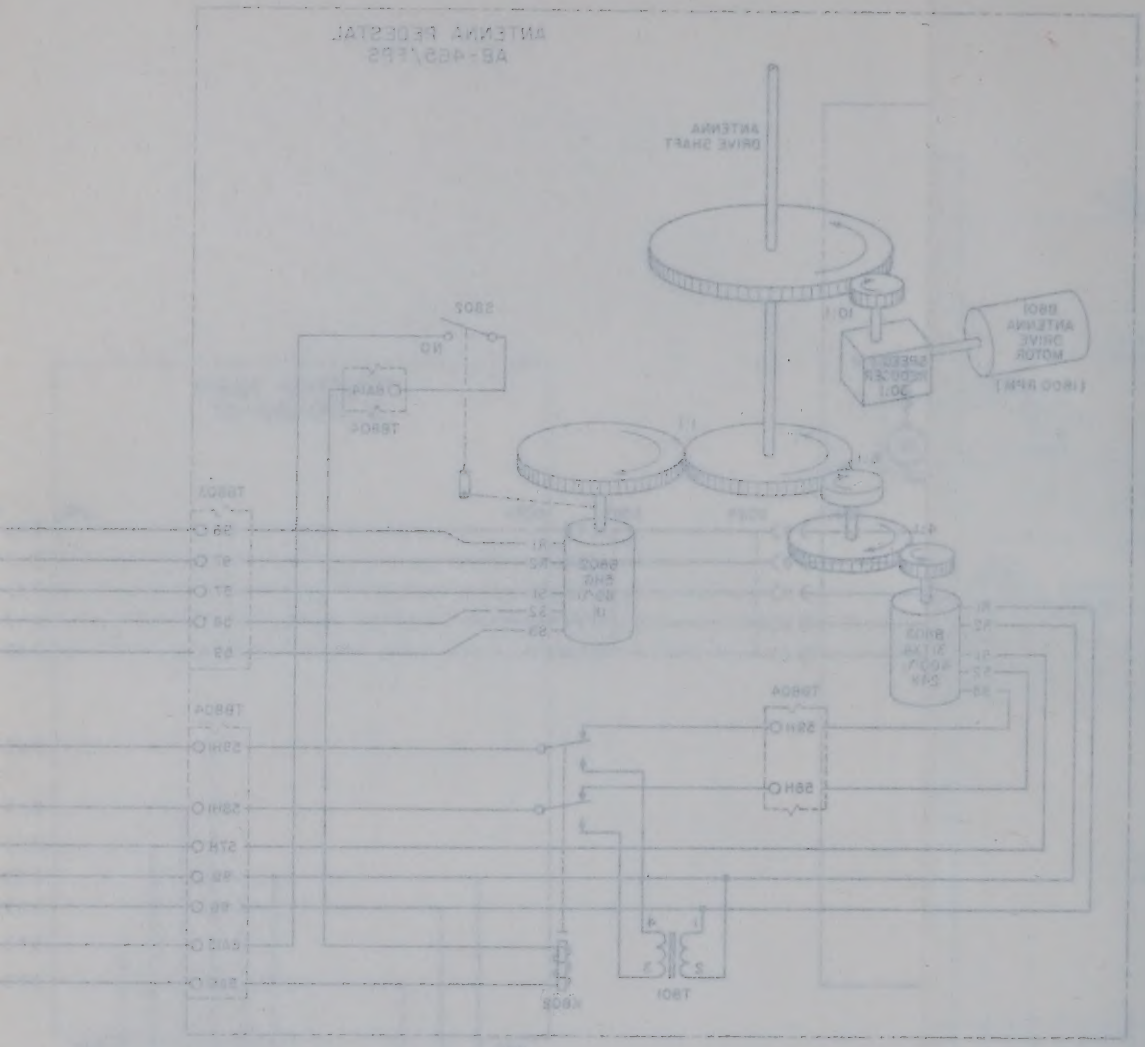

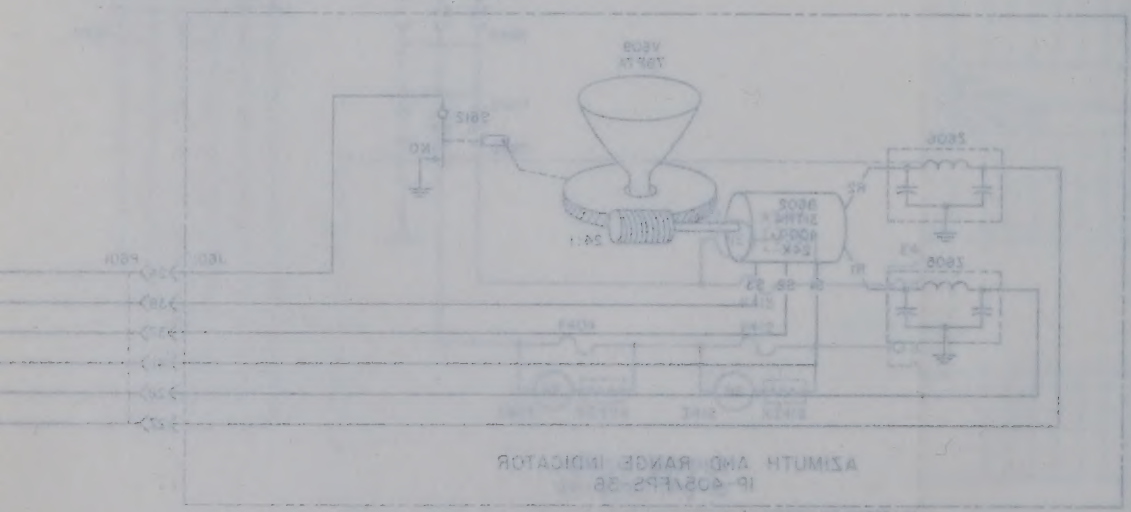

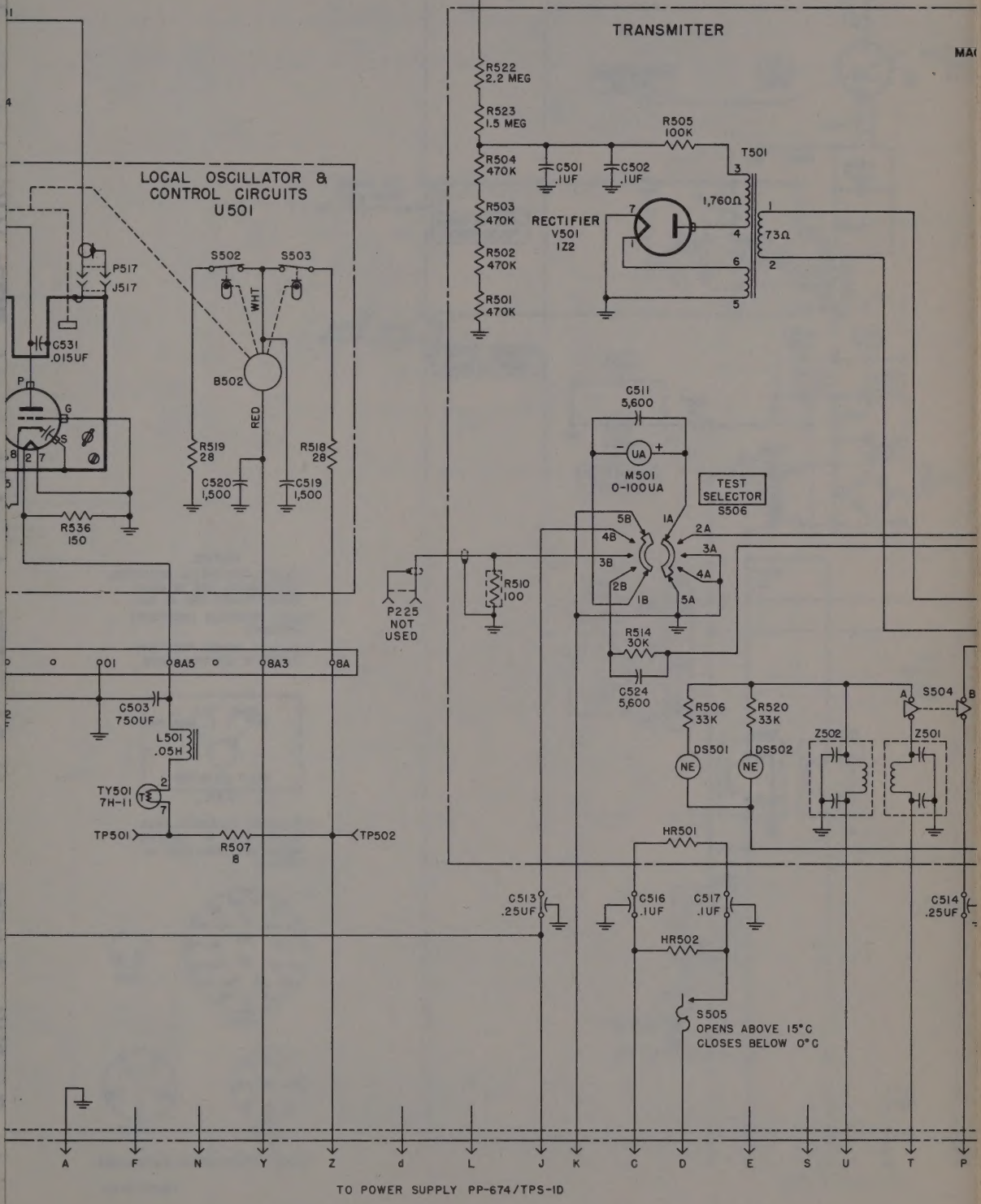

Filter AM–1570/TPS–1D, schematic diagram.

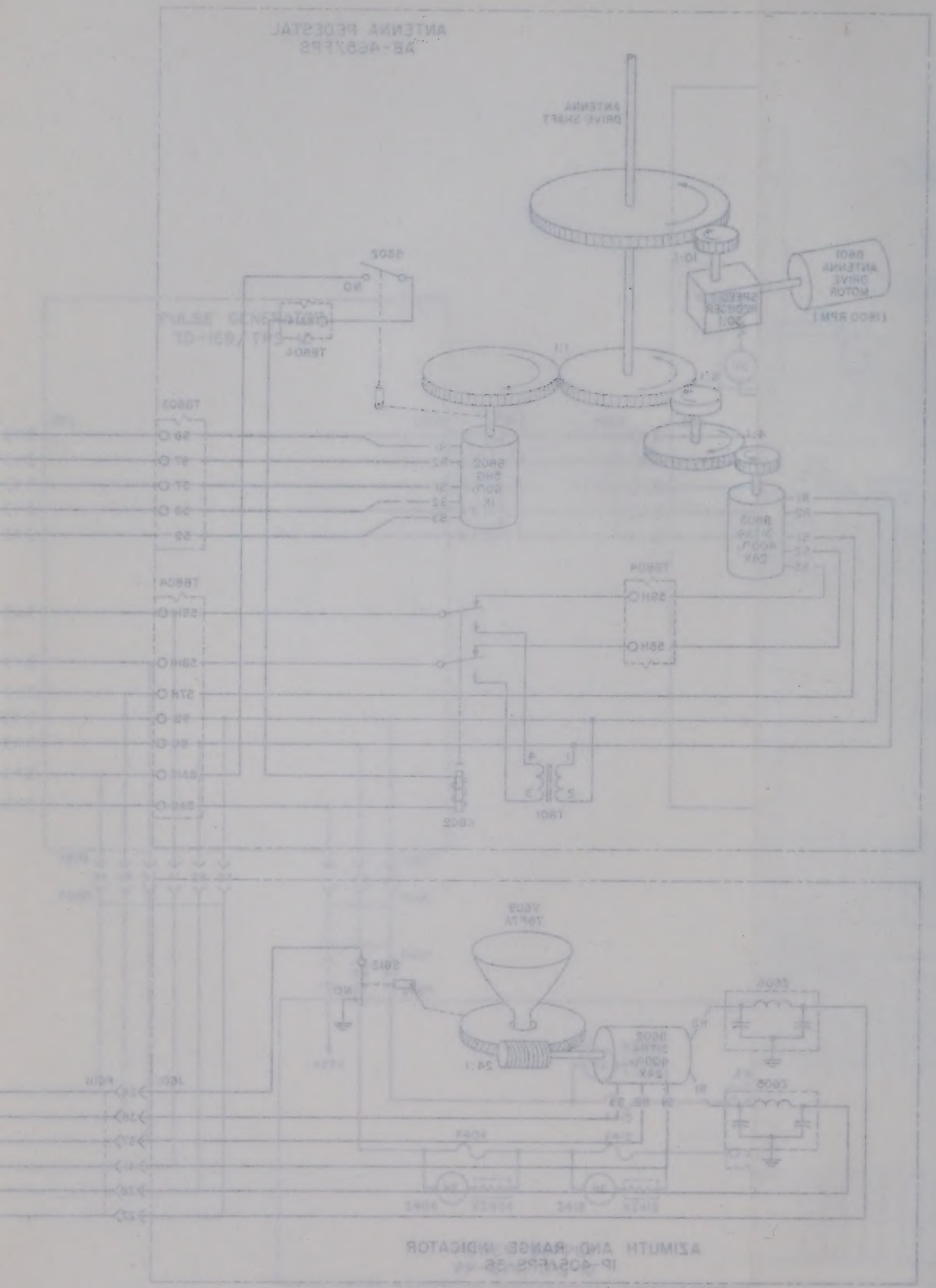

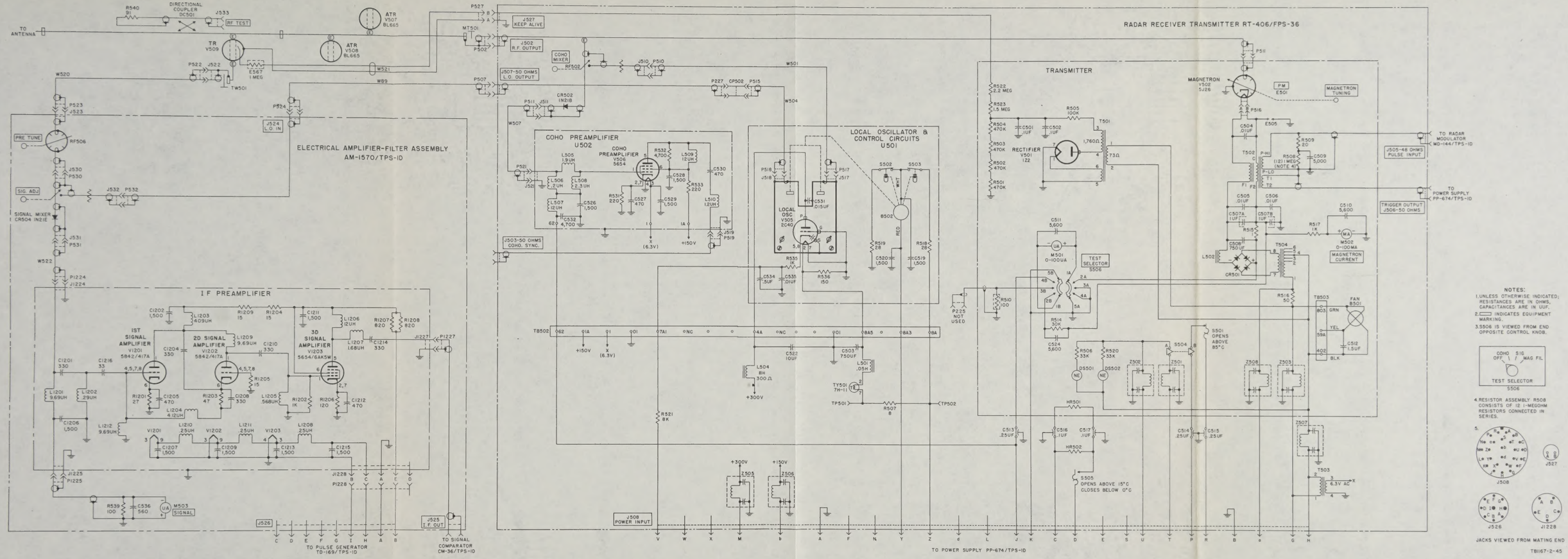

NOTES:
1. UNLESS OTHERWISE INDICATED; RESISTANCES ARE IN OHMS, CAPACITANCES ARE IN UUF.
2. ▭ INDICATES EQUIPMENT MARKING.
3. S506 IS VIEWED FROM END OPPOSITE CONTROL KNOB.
4. RESISTOR ASSEMBLY R508 CONSISTS OF 12 1-MEGOHM RESISTORS CONNECTED IN SERIES.
5.

Figure 49. Radar Receiver Transmitter RT-406/FPS-36 and Amplifier Filter AM-1570/TPS-1D, schematic diagram.

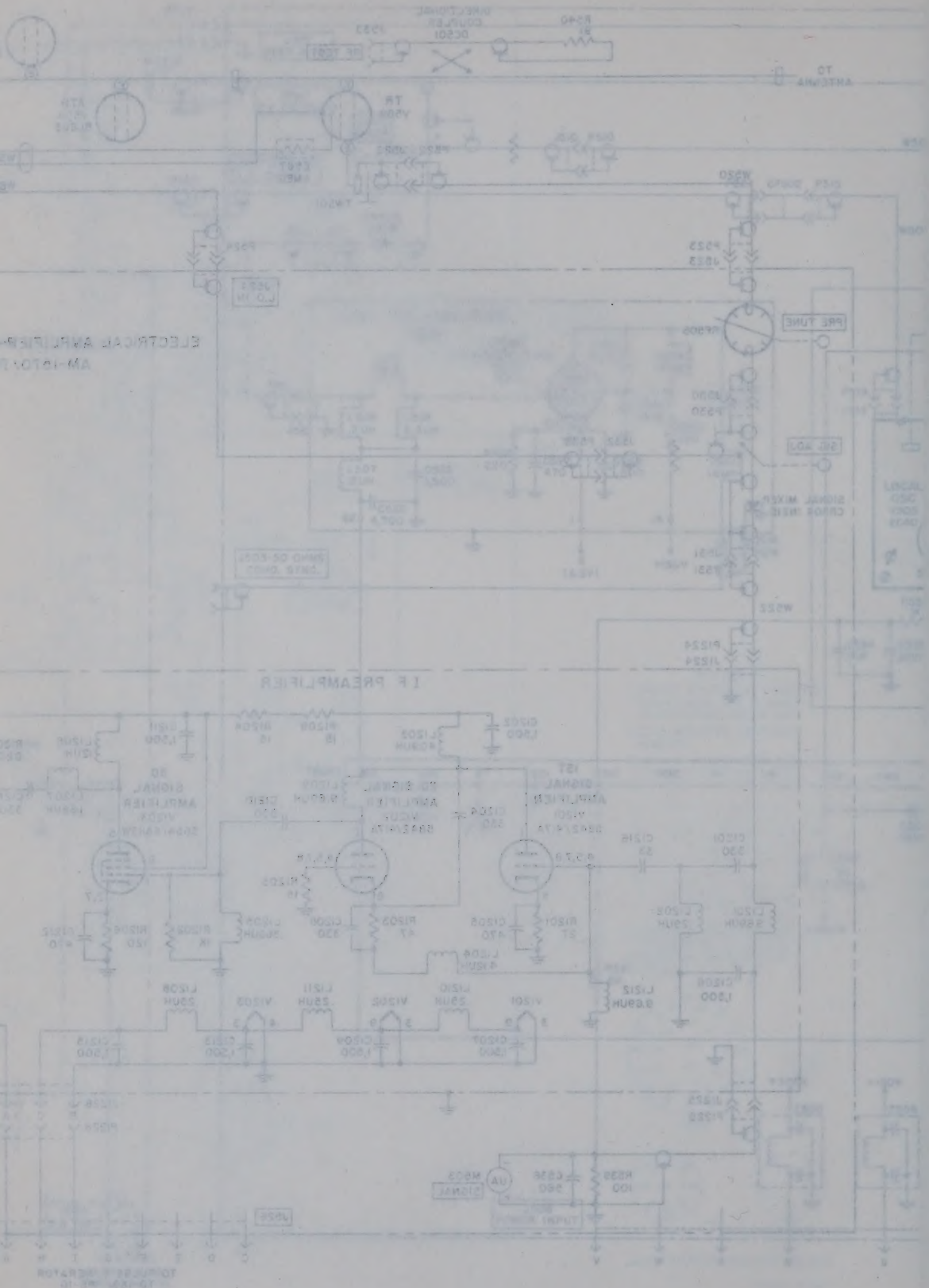

Figure 10. Radar Receiver Transmitter RT-400/PPS-36 and Amplifier

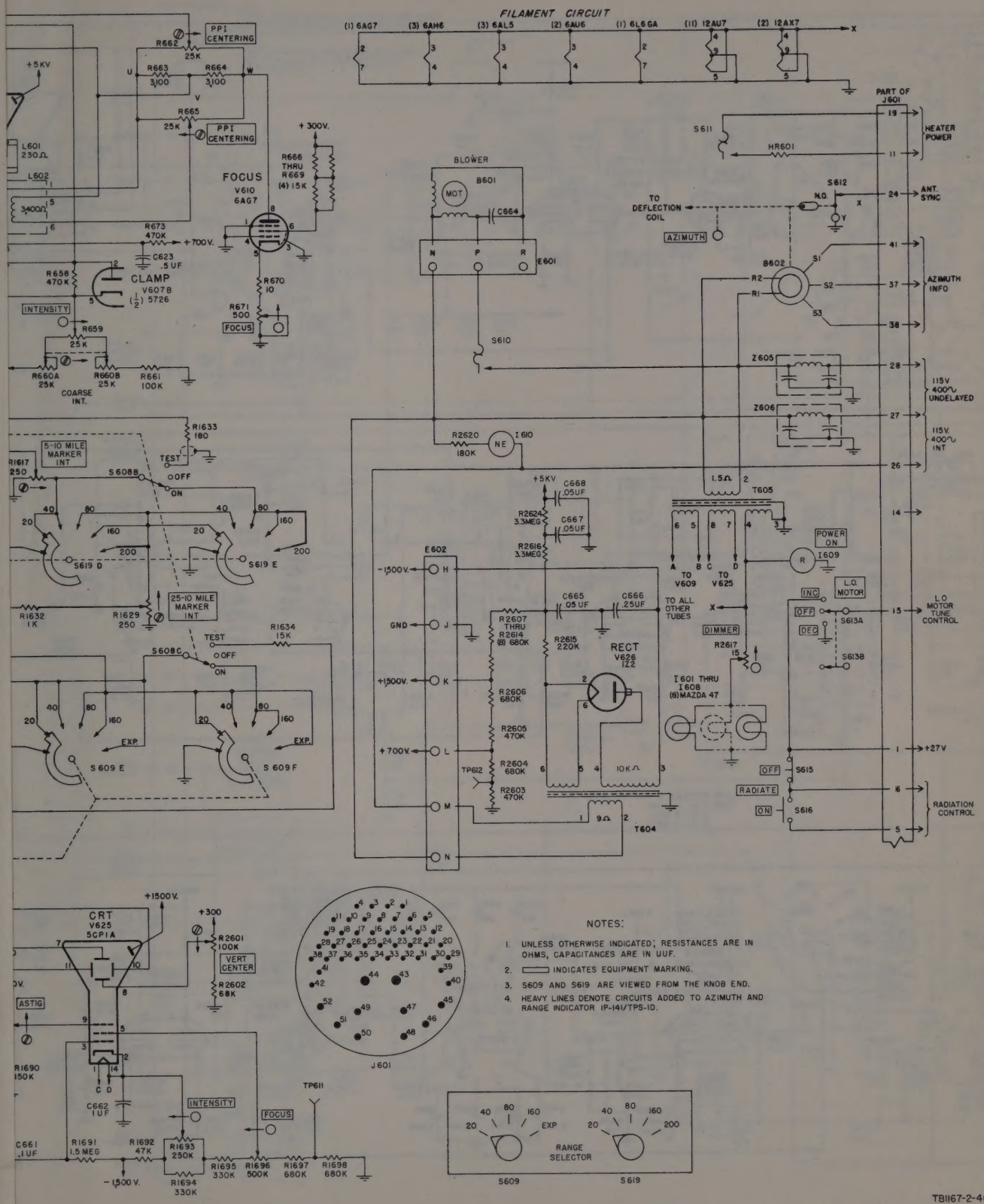

NOTES:

1. UNLESS OTHERWISE INDICATED; RESISTANCES ARE IN OHMS, CAPACITANCES ARE IN UUF.
2. ▭ INDICATES EQUIPMENT MARKING.
3. S609 AND S619 ARE VIEWED FROM THE KNOB END.
4. HEAVY LINES DENOTE CIRCUITS ADDED TO AZIMUTH AND RANGE INDICATOR IP-141/TPS-10.

TB1167-2-46

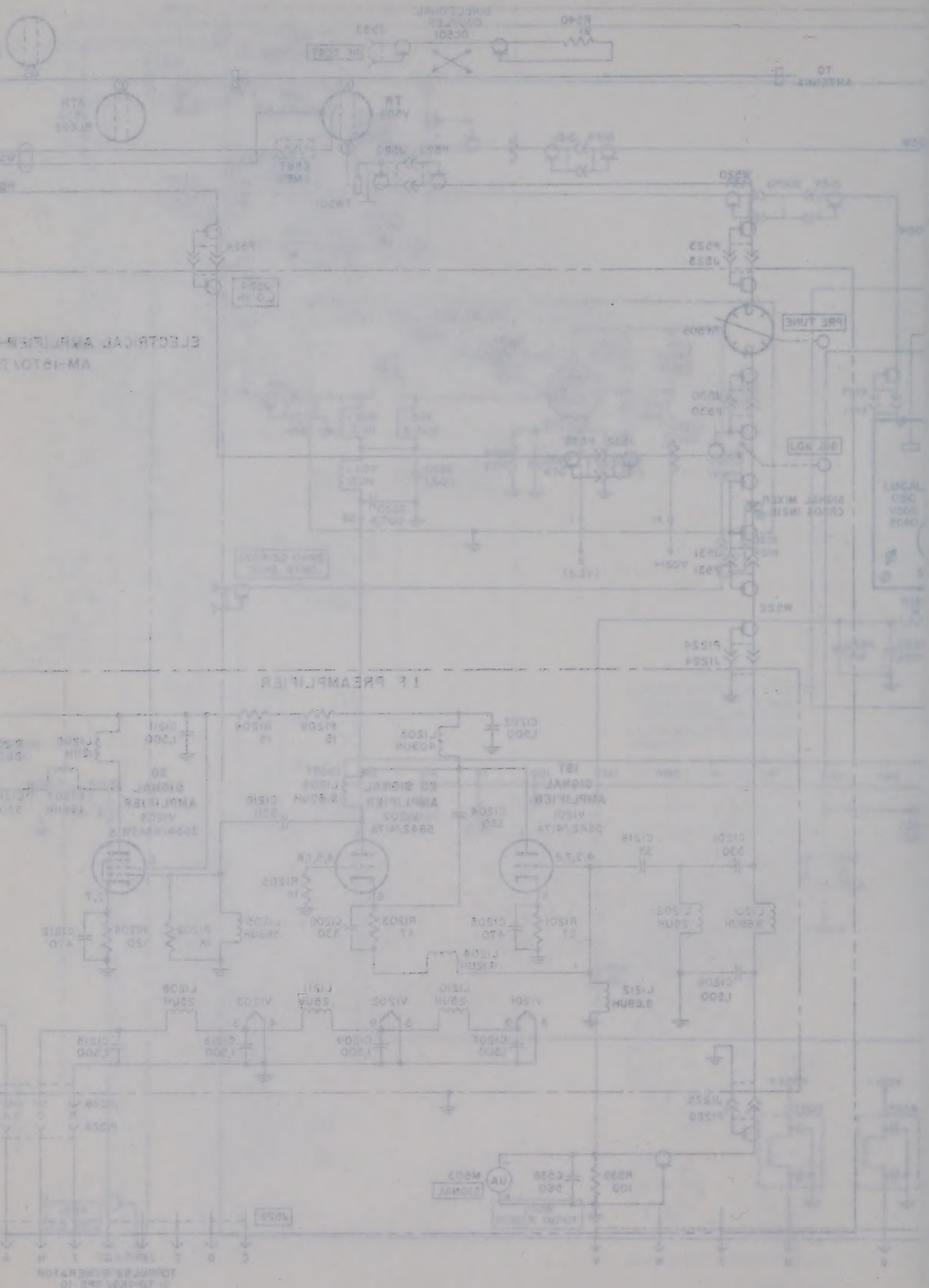

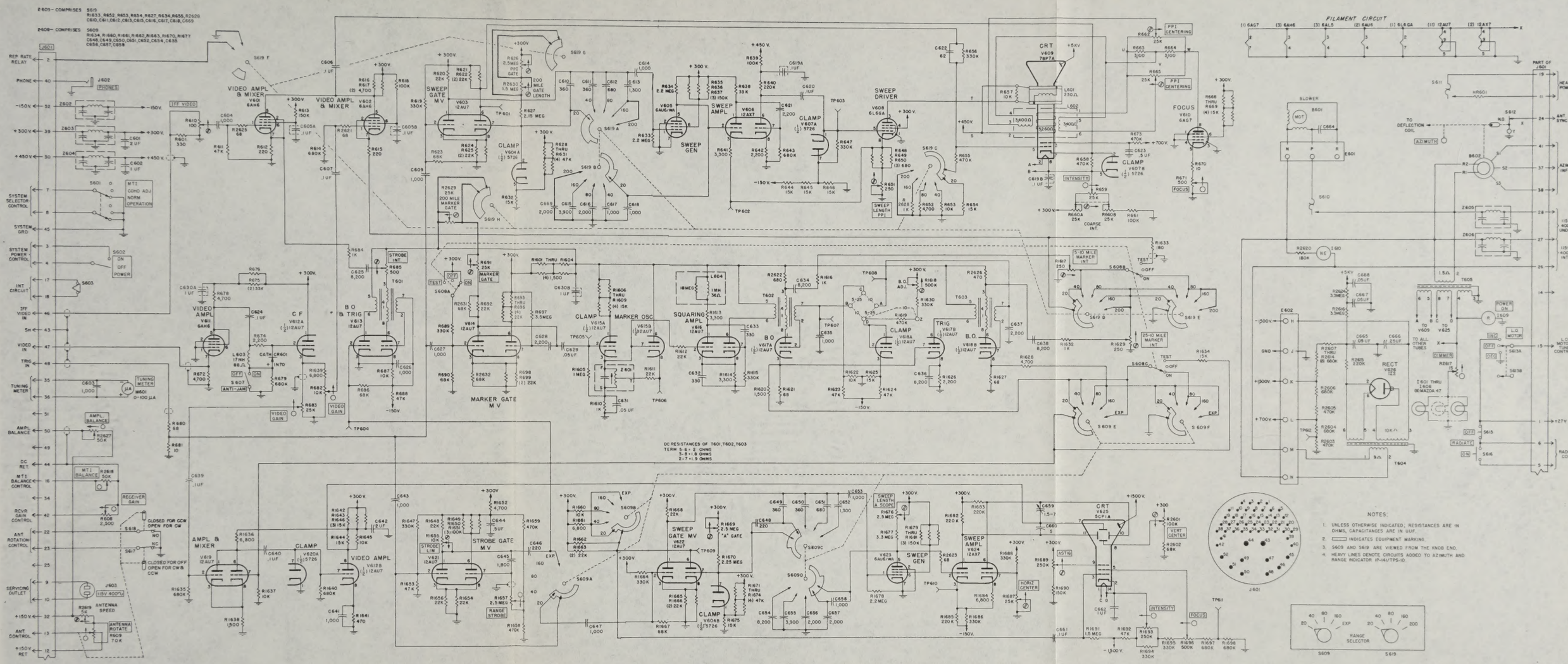

Figure 50. Azimuth and Range Indicator IP–405/FPS–36, schematic diagram.

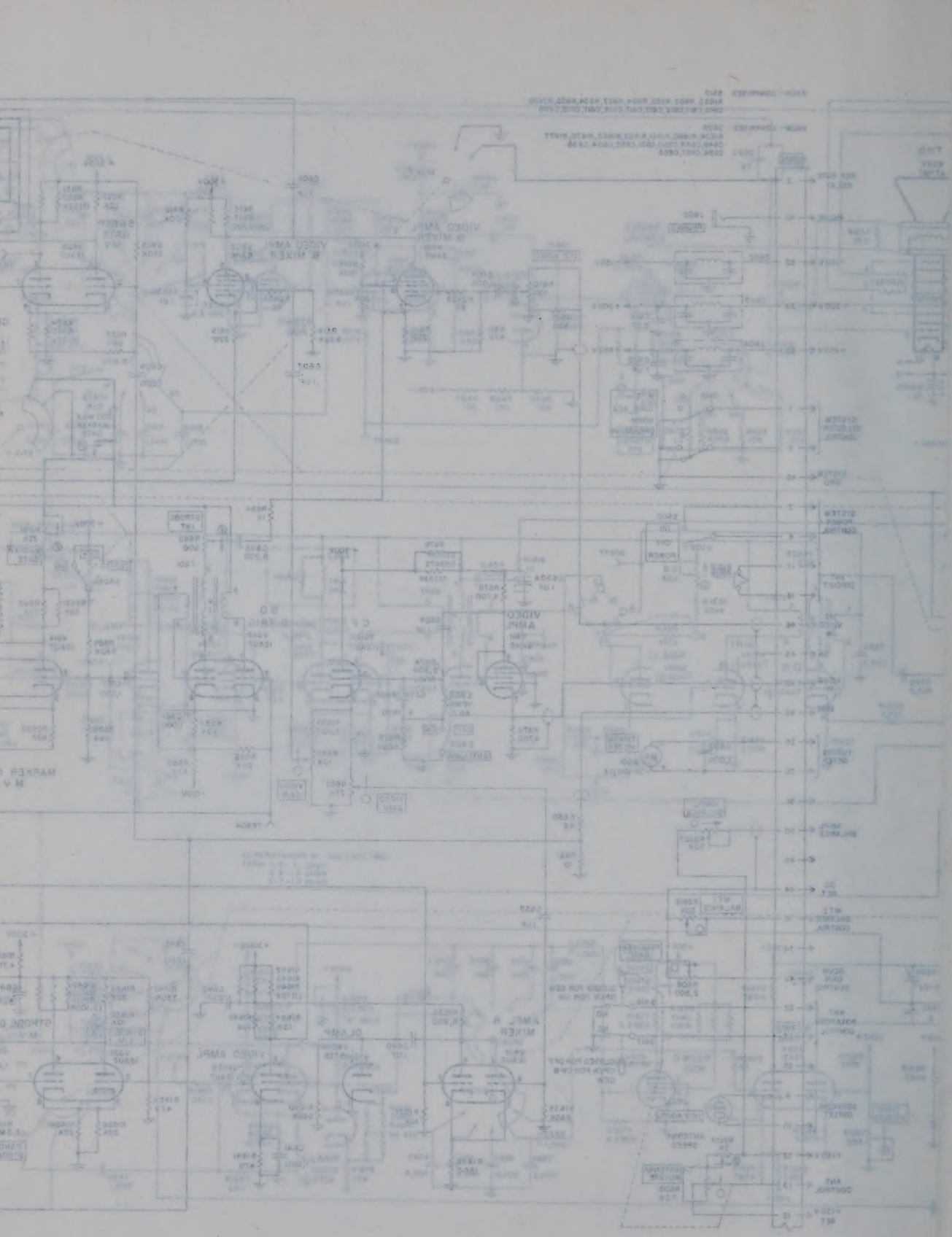

Figure 56. Azimuth and Range Indicator IP-[illegible]/PPS-[illegible], schematic diagram.

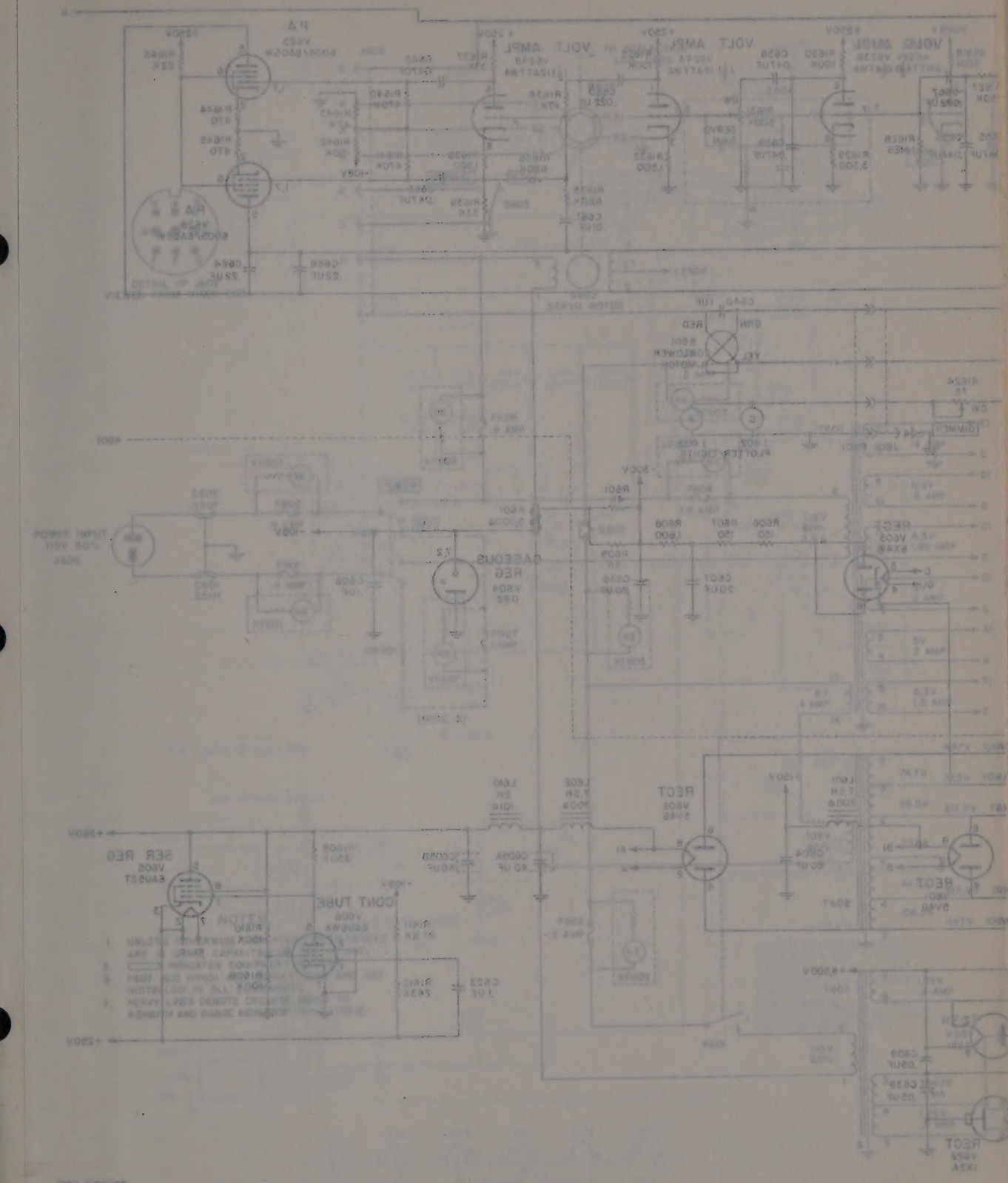

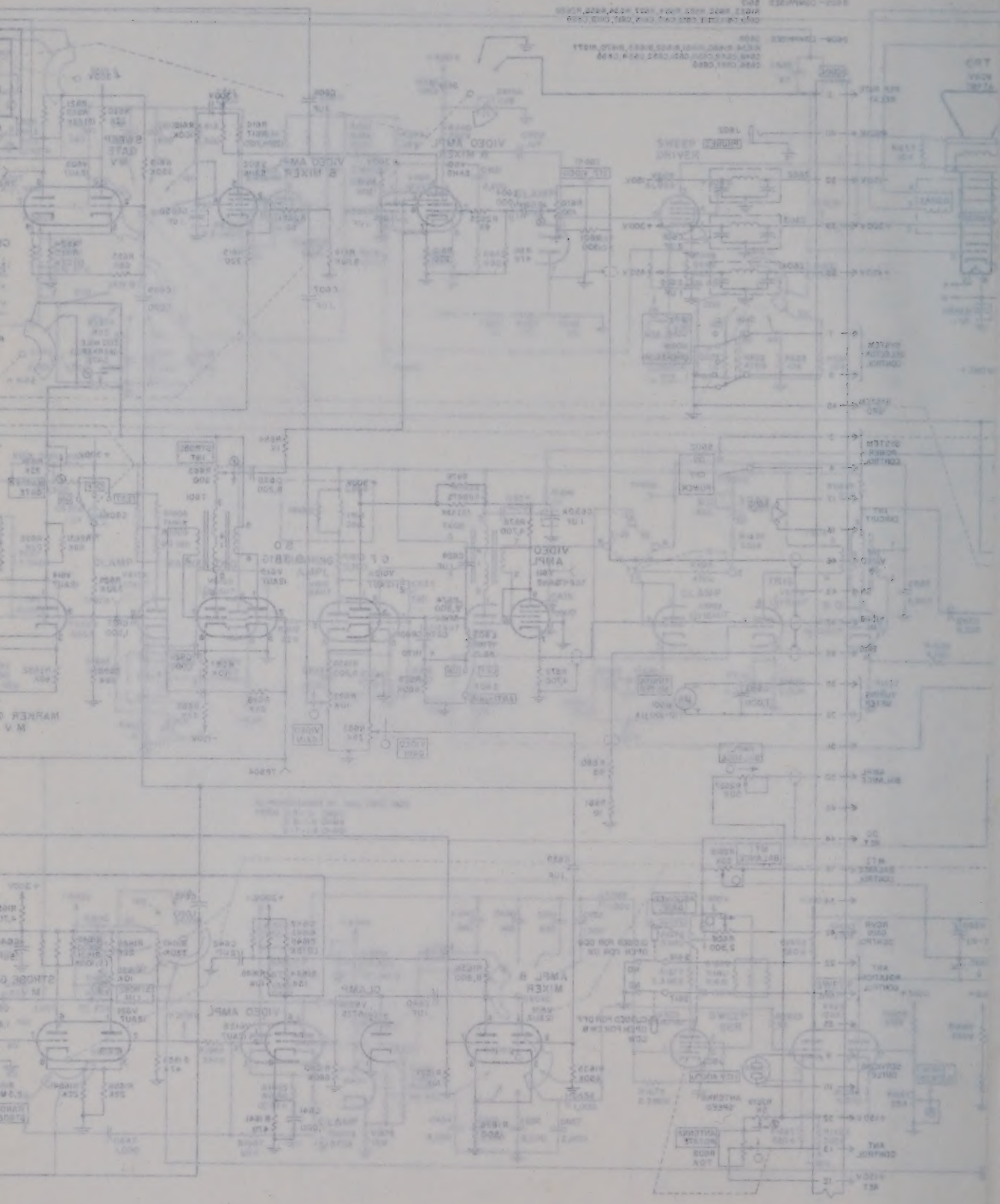

Figure 80. Azimuth and Range Indicator IP-305/FPS-80, schematic diagram.

DETAIL OF J602
VIEWED FROM WIRED END

NOTES:

1. UNLESS OTHERWISE INDICATED, RESISTANCES ARE IN OHMS, CAPACITANCES ARE IN UUF.
2. ▭ INDICATES EQUIPMENT MARKING.
3. F607 AND HR601 AND CONNECTIONS ARE NOT INSTALLED IN ALL EQUIPMENTS.
4. HEAVY LINES DENOTE CIRCUITS ADDED TO AZIMUTH AND RANGE INDICATOR IP-345/TPS-10.

TB1167-2-47①

Figure 51. Azimuth and Range Indicator IP-406/FPS-36, schematic diagram.

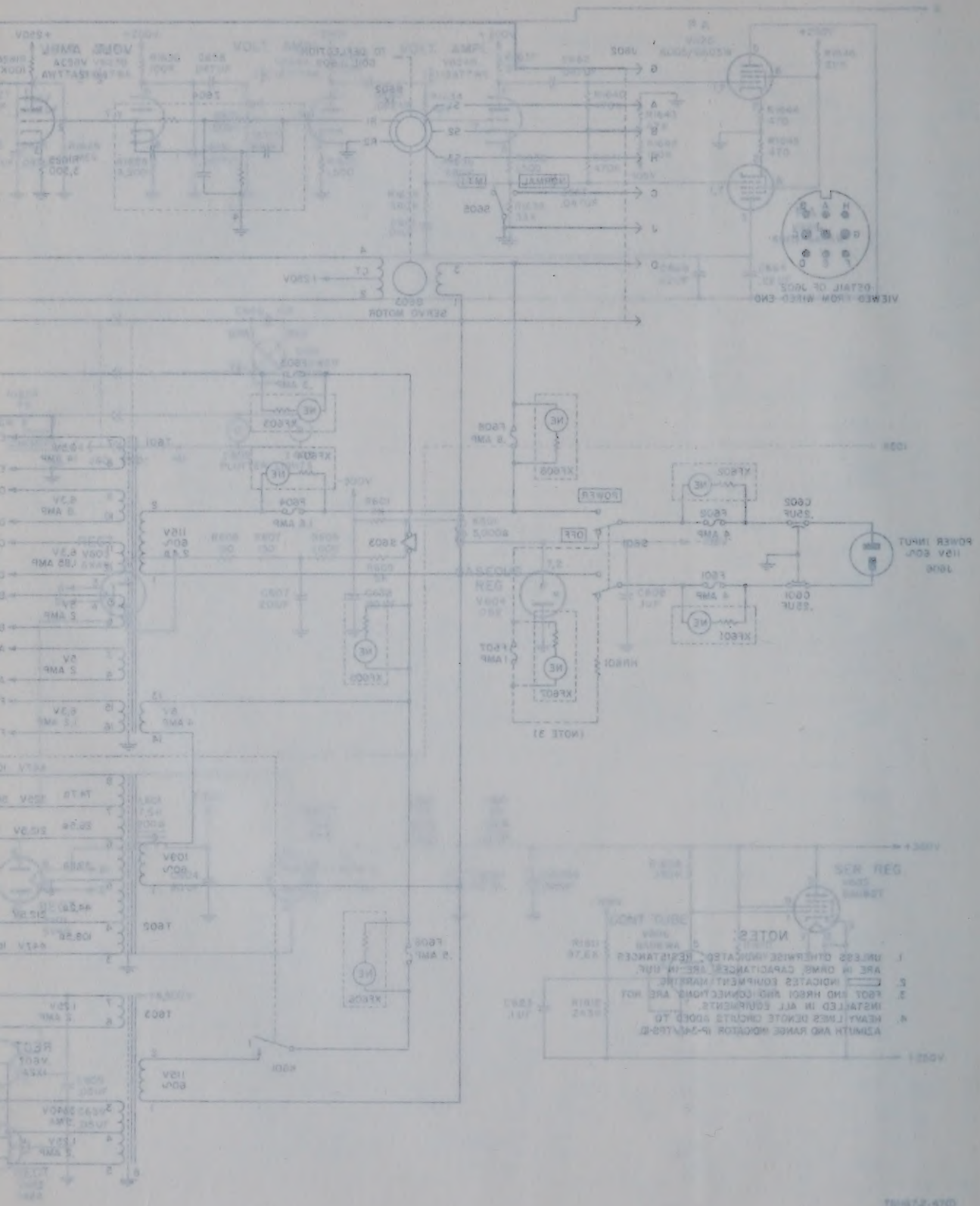

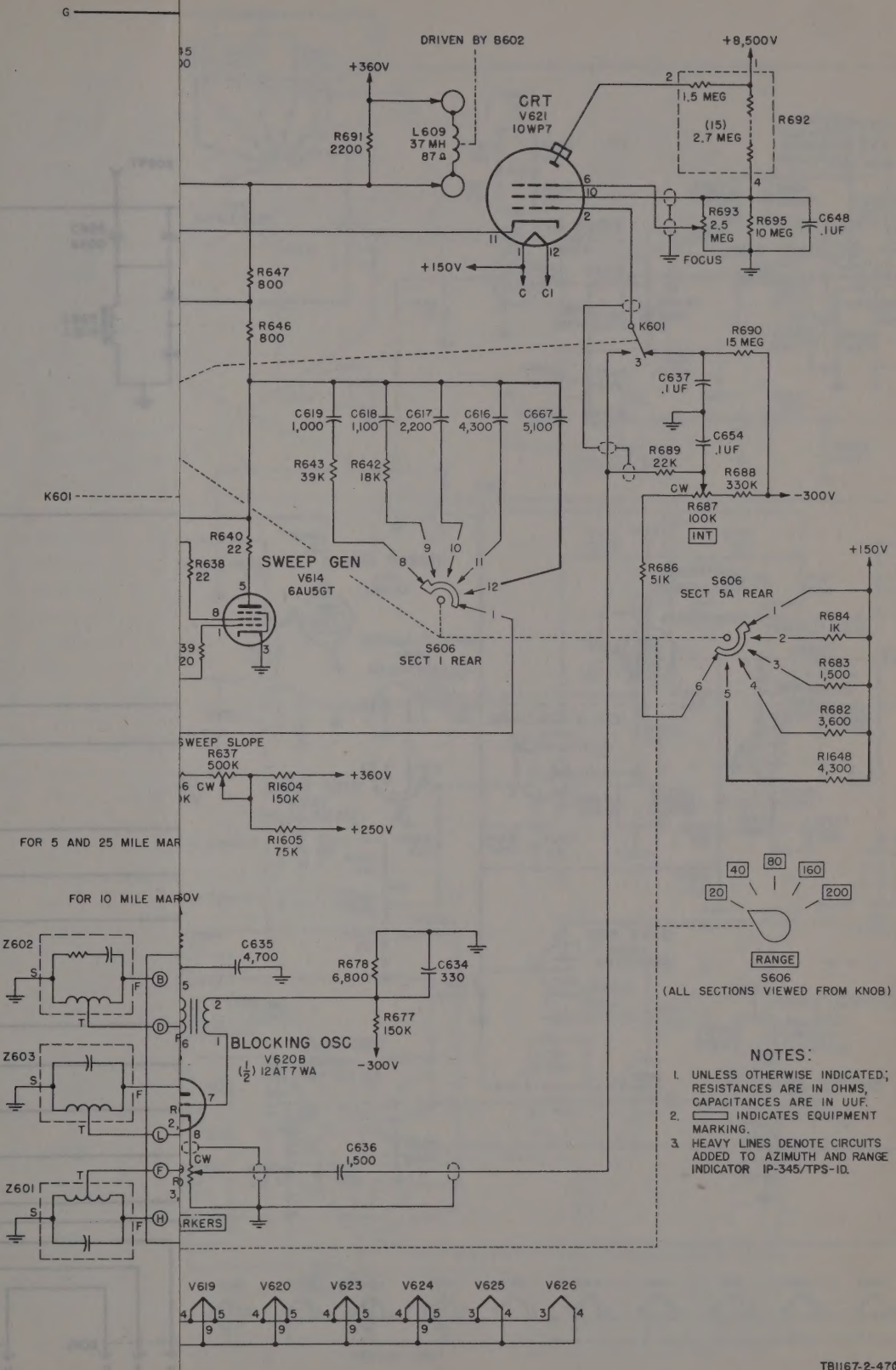

NOTES:

1. UNLESS OTHERWISE INDICATED; RESISTANCES ARE IN OHMS, CAPACITANCES ARE IN UUF.
2. ▭ INDICATES EQUIPMENT MARKING.
3. HEAVY LINES DENOTE CIRCUITS ADDED TO AZIMUTH AND RANGE INDICATOR IP-345/TPS-10.

TB1167-2-47(2)

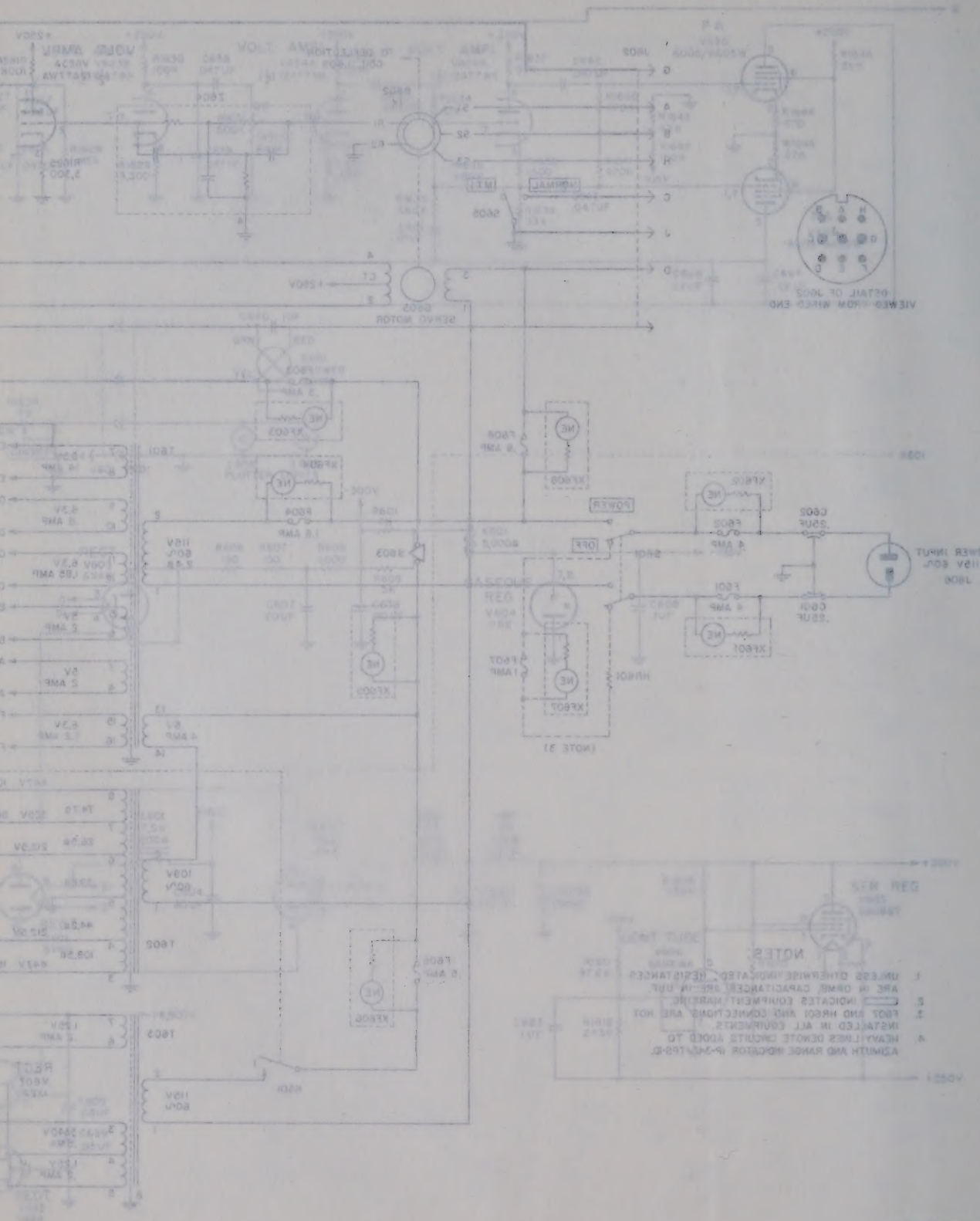

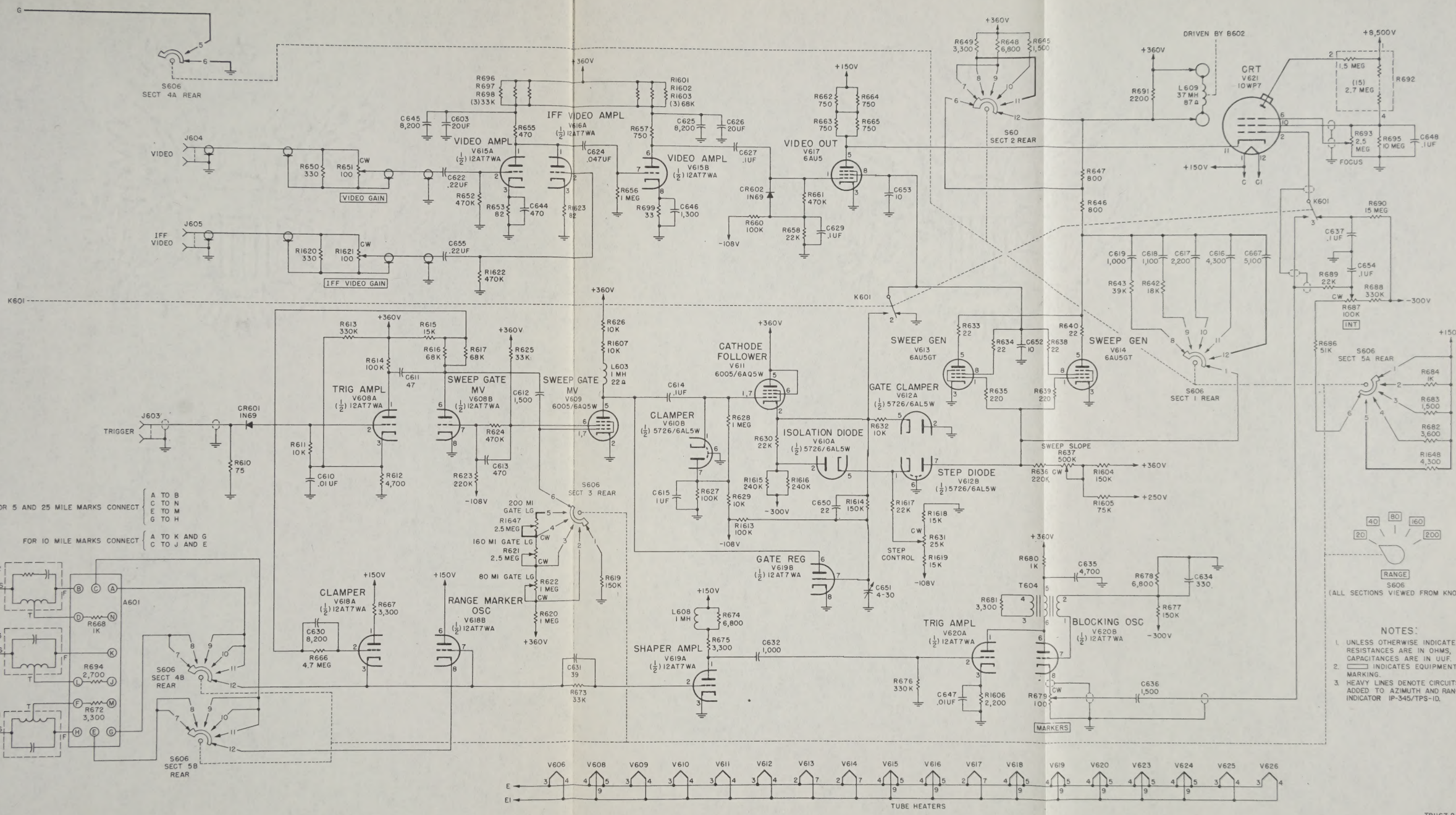

NOTES:

1. UNLESS OTHERWISE INDICATED; RESISTANCES ARE IN OHMS, CAPACITANCES ARE IN UUF.
2. ▭ INDICATES EQUIPMENT MARKING.
3. HEAVY LINES DENOTE CIRCUITS ADDED TO AZIMUTH AND RANGE INDICATOR IP-345/TPS-10.

TB1167-2-47③

Figure 51.—continued.

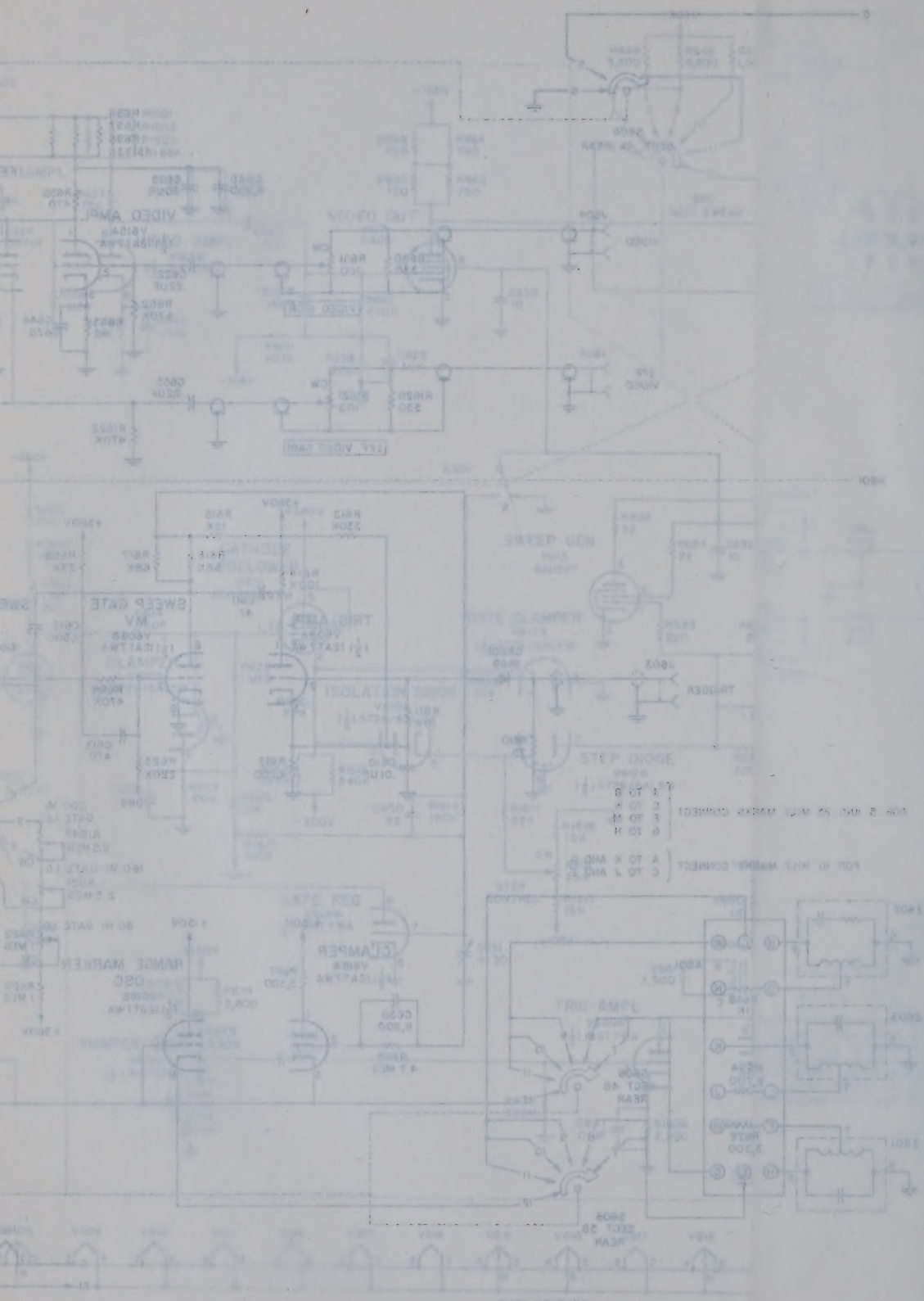

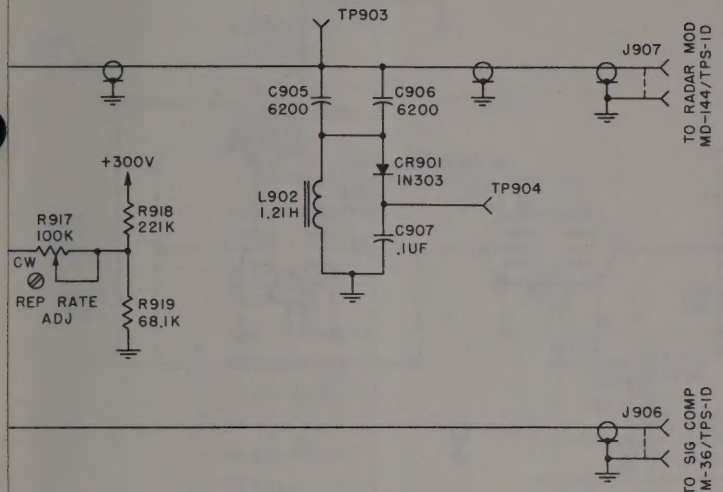

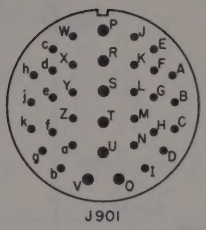

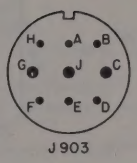

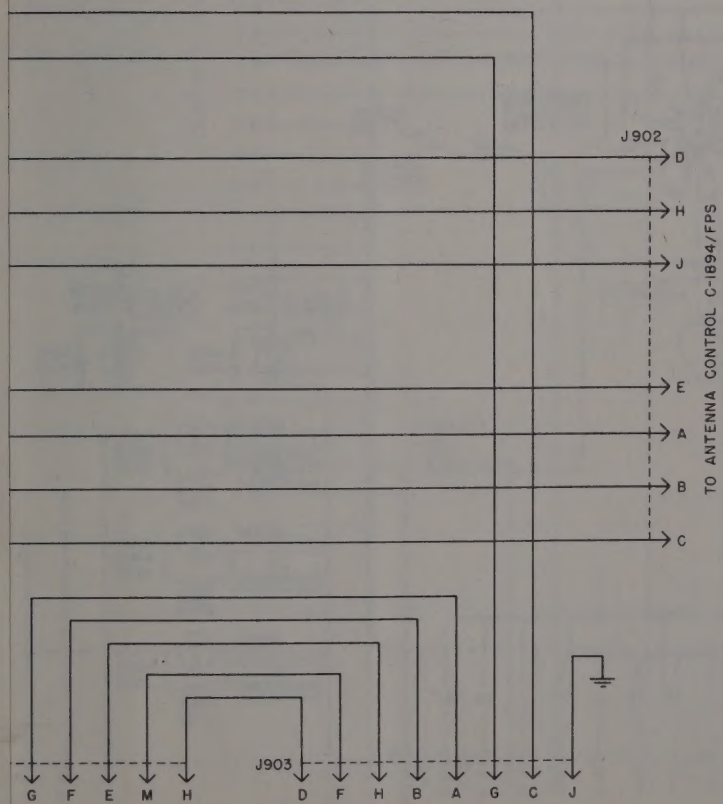

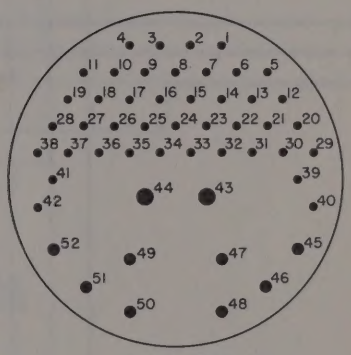

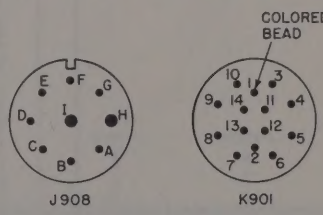

NOTES:

1. UNLESS OTHERWISE INDICATED; RESISTANCES ARE IN OHMS, CAPACITANCES ARE IN UUF.
2. ▭ INDICATES EQUIPMENT MARKING.
3. S901 IS VIEWED FROM KNOB END.

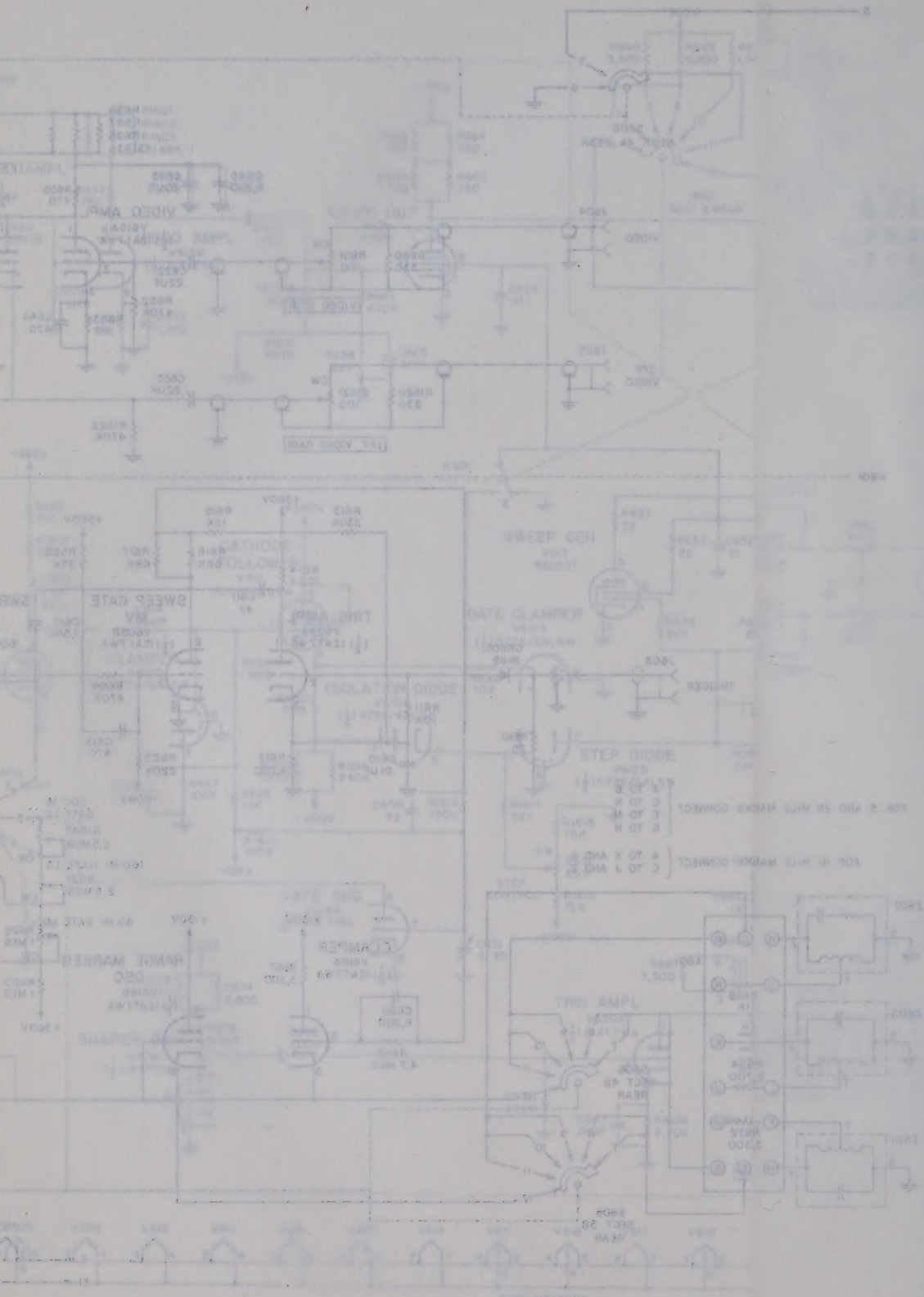

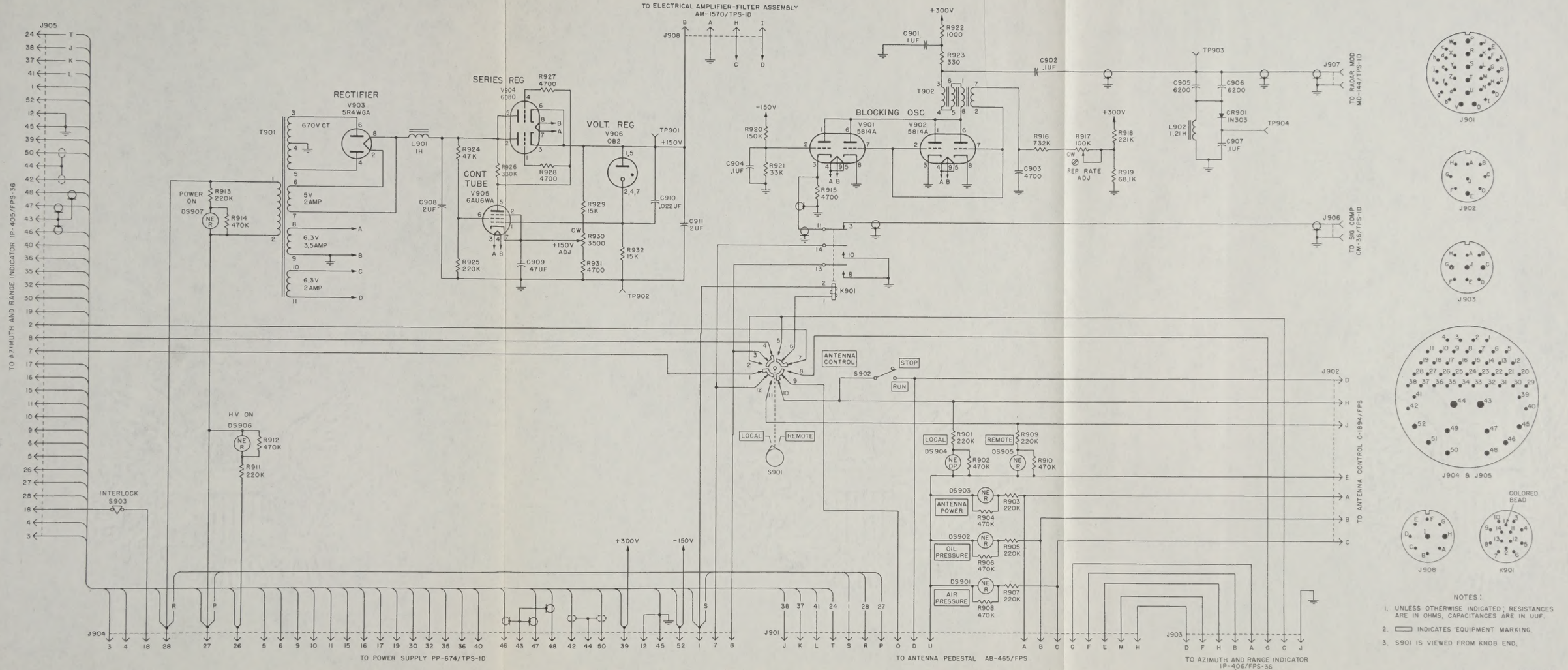

Figure 52. Pulse Generator TD-169/TPS-1D, schematic diagram.

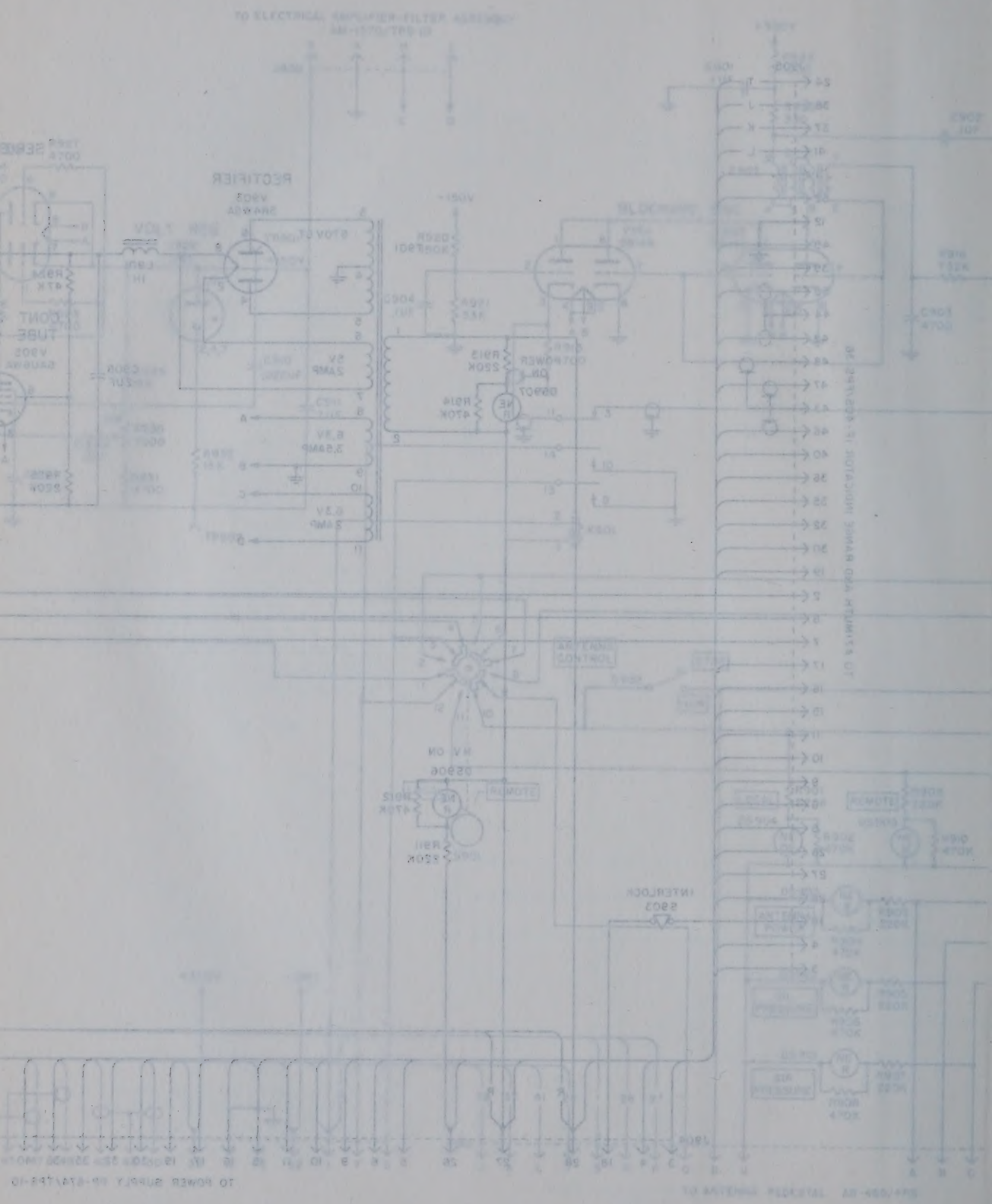

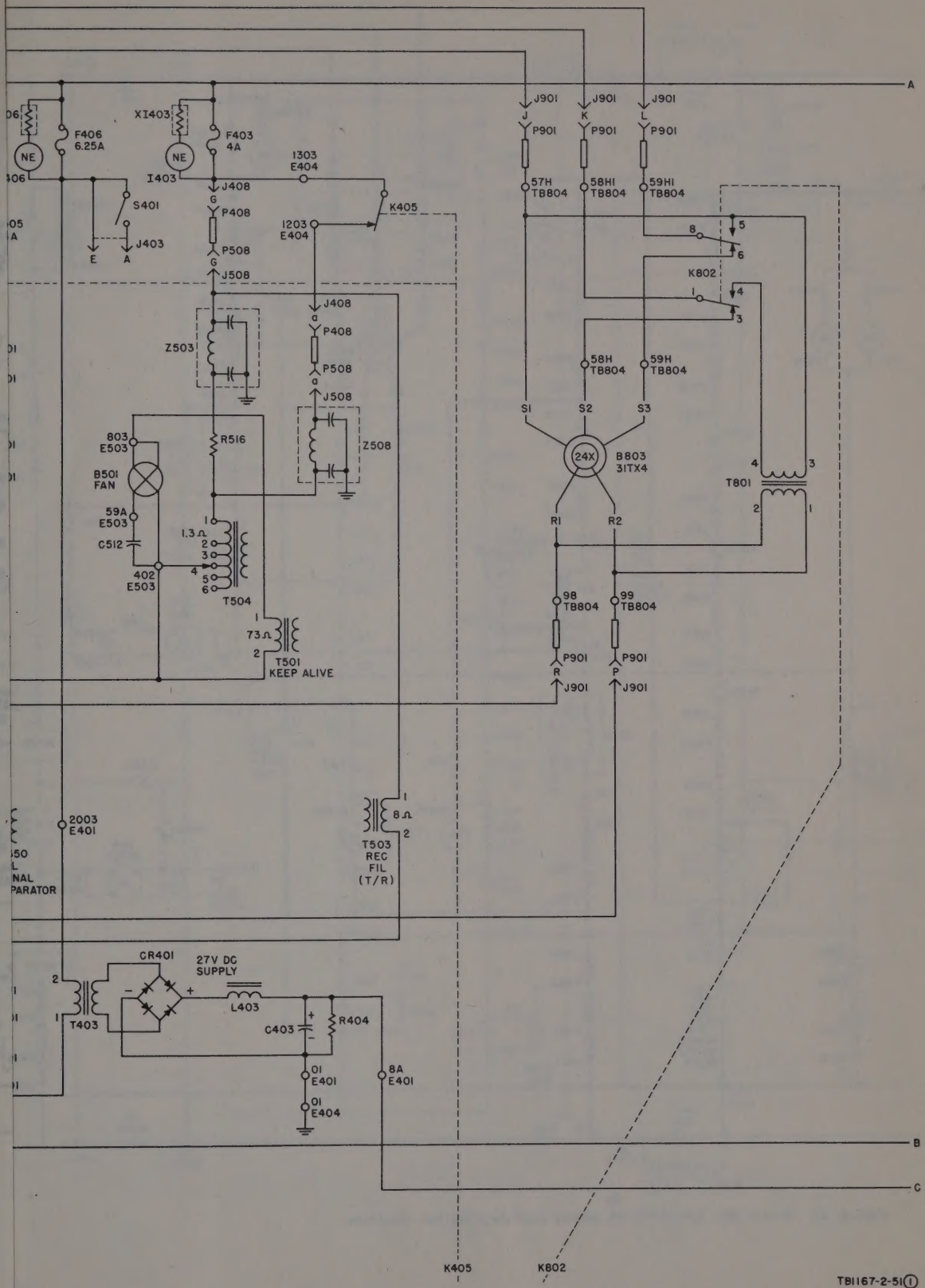

A
B
C
J901
P901
57H TB804
58H1 TB804
59H1 TB804
58H TB804
59H TB804
S1
S2
S3
24X
B803 31TX4
R1
R2
T801
98 TB804
99 TB804
F406 6.25A
XI403
F403 4A
NE
I403
1303 E404
1203 E404
K405
S401
J403
J408
P408
P508
J508
Z503
Z508
R516
803 E503
B501 FAN
59A E503
C512
402 E503
1.3Ω
T504
73Ω
T501 KEEP ALIVE
2003 E401
8Ω
T503 REC FIL (T/R)
CR401
27V DC SUPPLY
L403
T403
C403
R404
01 E401
01 E404
8A E401
K802
K405
K802

TB1167-2-51 (1)

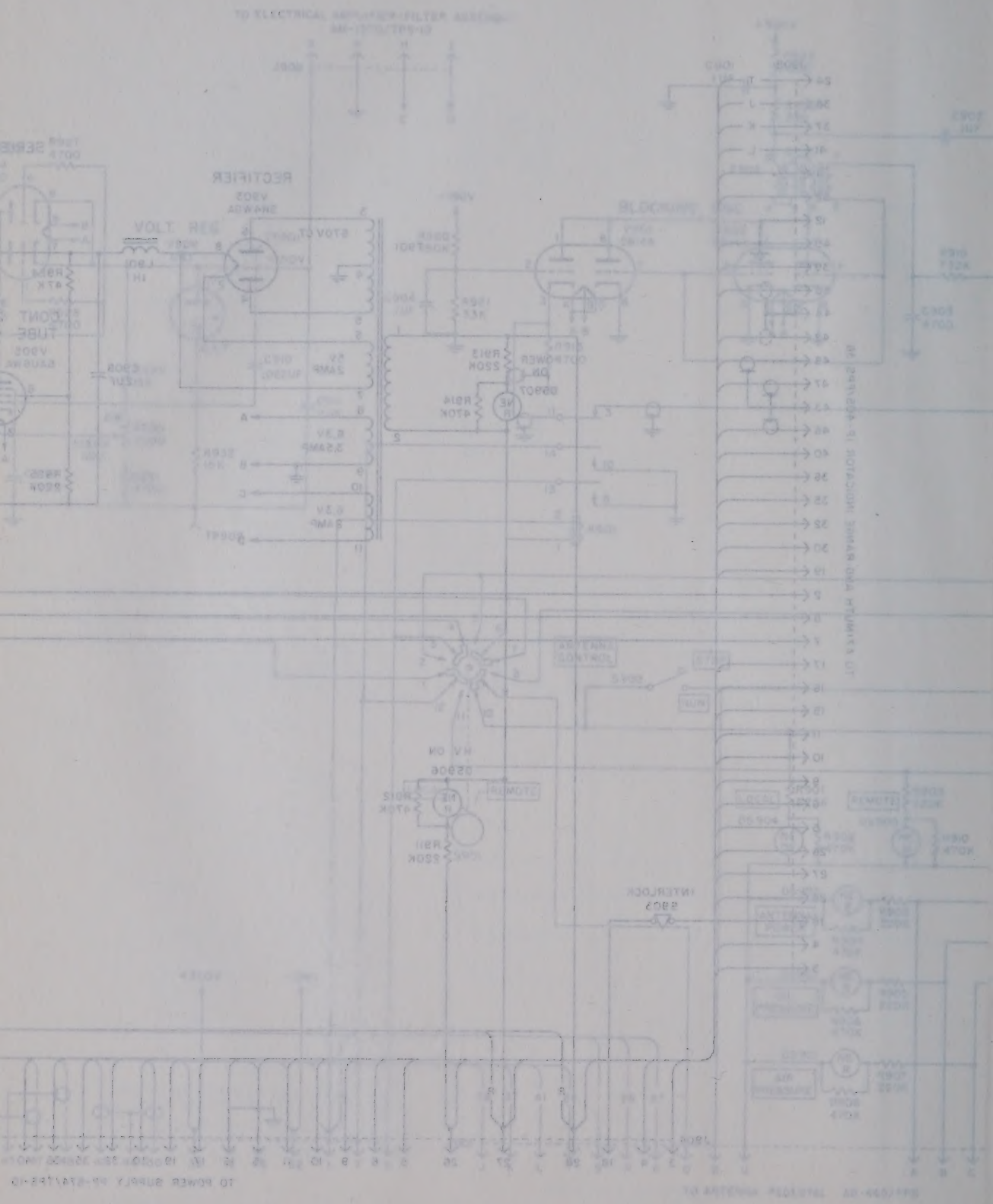

Figure 88. Pulse Generator TD-460/TPS-10, schematic diagram.

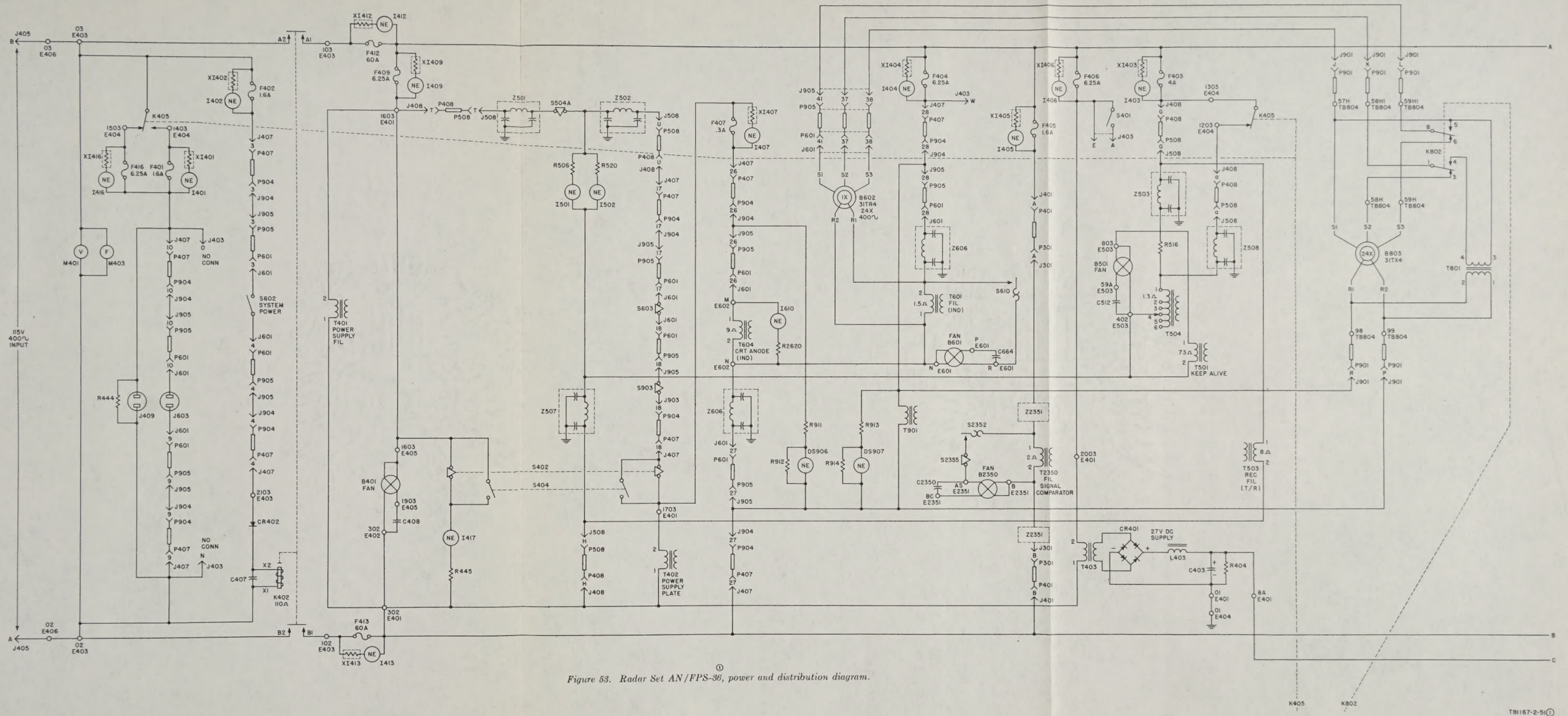

① *Figure 53. Radar Set AN/FPS-36, power and distribution diagram.*

T81167-2-51①

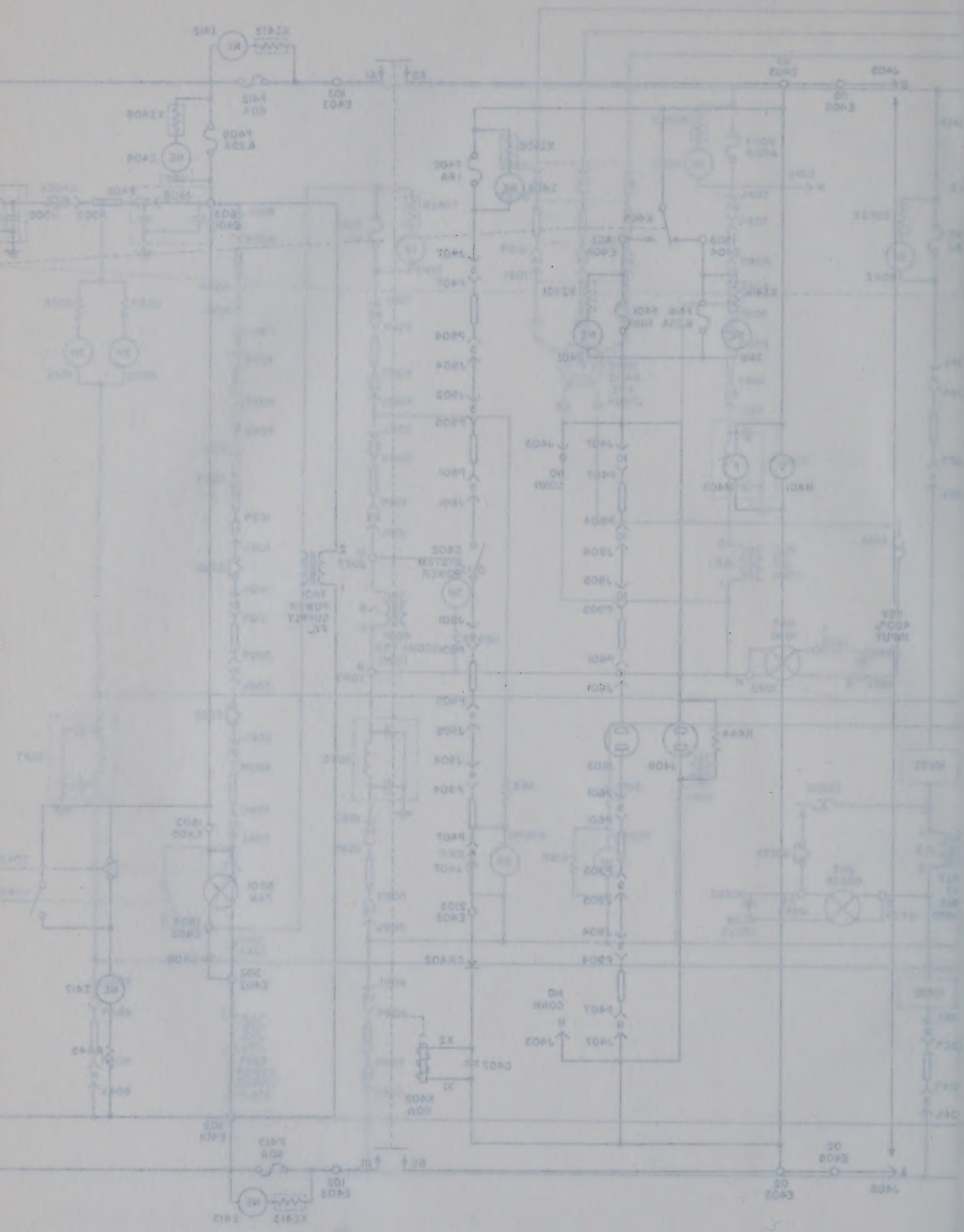

Figure 88. Radar Set AN/TPS-59, power and distribution diagram.

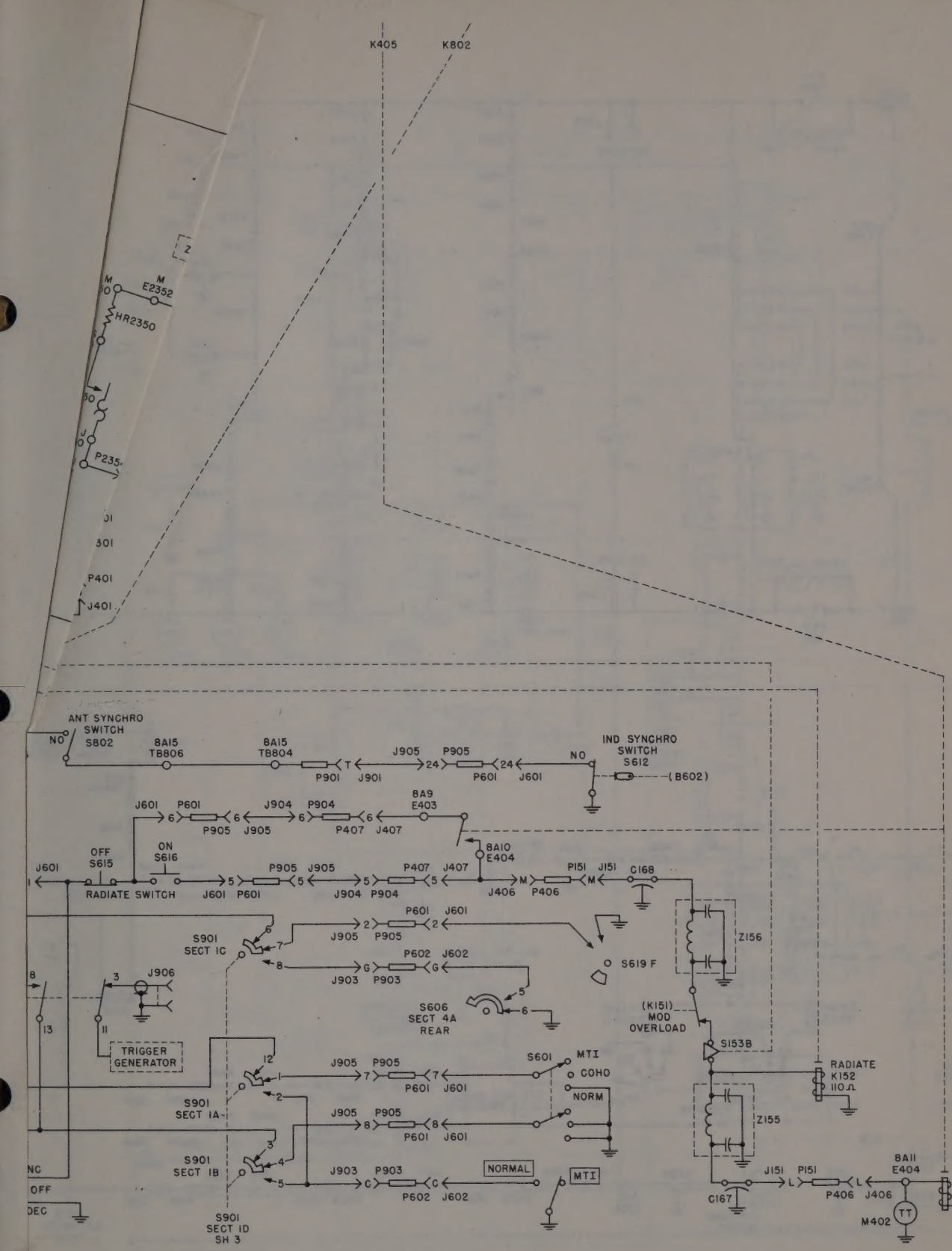
K405
K802
M E2352
HR2350
P235
301
P401
J401
ANT SYNCHRO SWITCH S802
NO
8A15 TB806
8A15 TB804
P901 J901
J905 P905
24 24
P601 J601
NO
IND SYNCHRO SWITCH S612
(B602)
J601 P601
P905 J905
J904 P904
P407 J407
8A9 E403
8A10 E404
OFF S615
ON S616
RADIATE SWITCH
J601 P601
P905 J905
P904 P904
P407 J407
J406 P406
P151 J151
C168
P601 J601
J905 P905
S901 SECT IC
P602 J602
J903 P903
S619 F
Z156
J906
S606 SECT 4A REAR
(K151) MOD OVERLOAD
S153B
TRIGGER GENERATOR
S601
MTI
COHO
NORM
RADIATE K152 110Ω
J905 P905
P601 J601
S901 SECT 1A
Z155
S901 SECT 1B
J903 P903
P602 J602
NORMAL
MTI
J151 P151
C167
P406 J406
8A11 E404
K405 230Ω
M402
TT
S901 SECT 1D SH 3
TB1167-2-51②

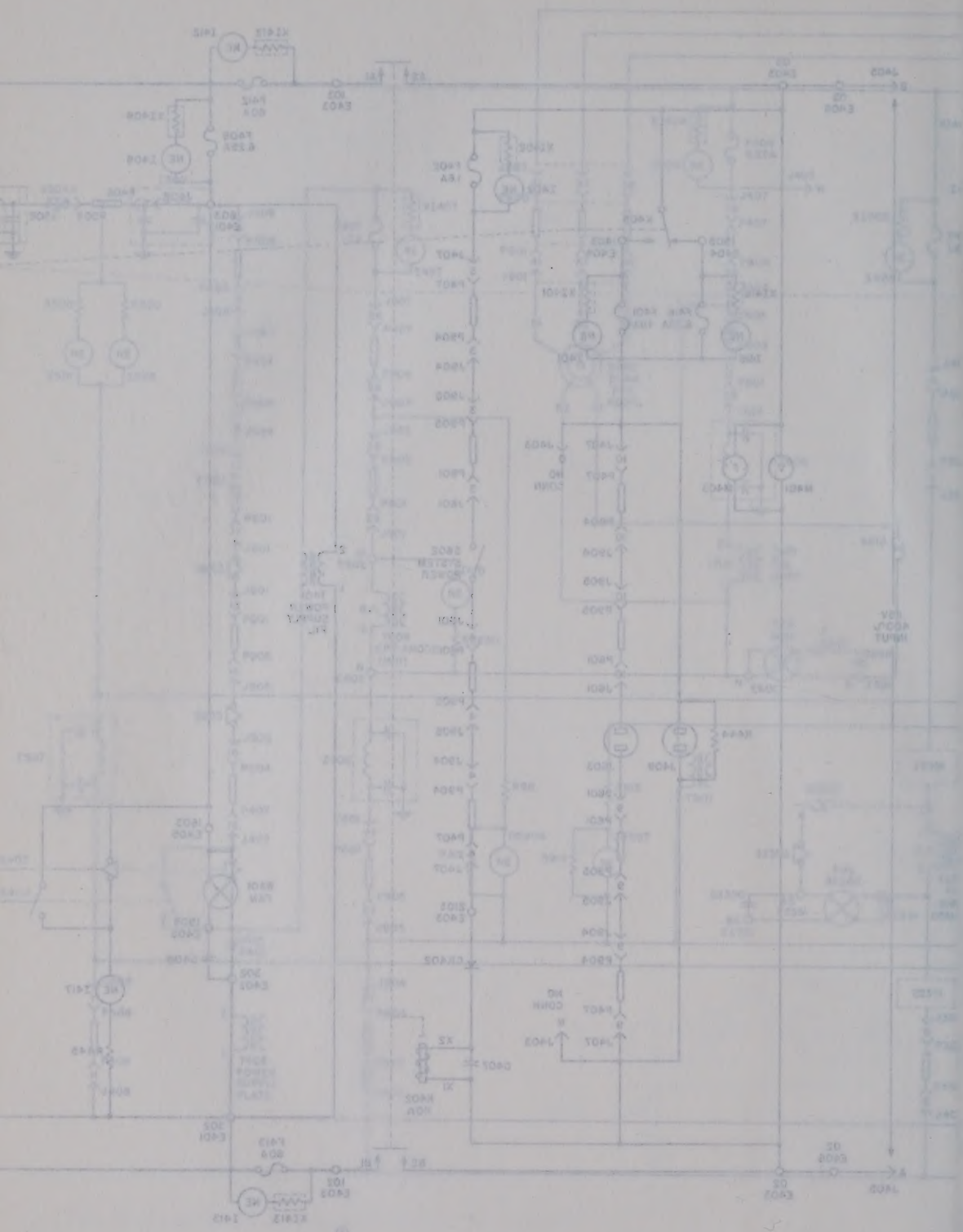

Figure 68. Radar Set AN/TPS-59, power and distribution diagram.

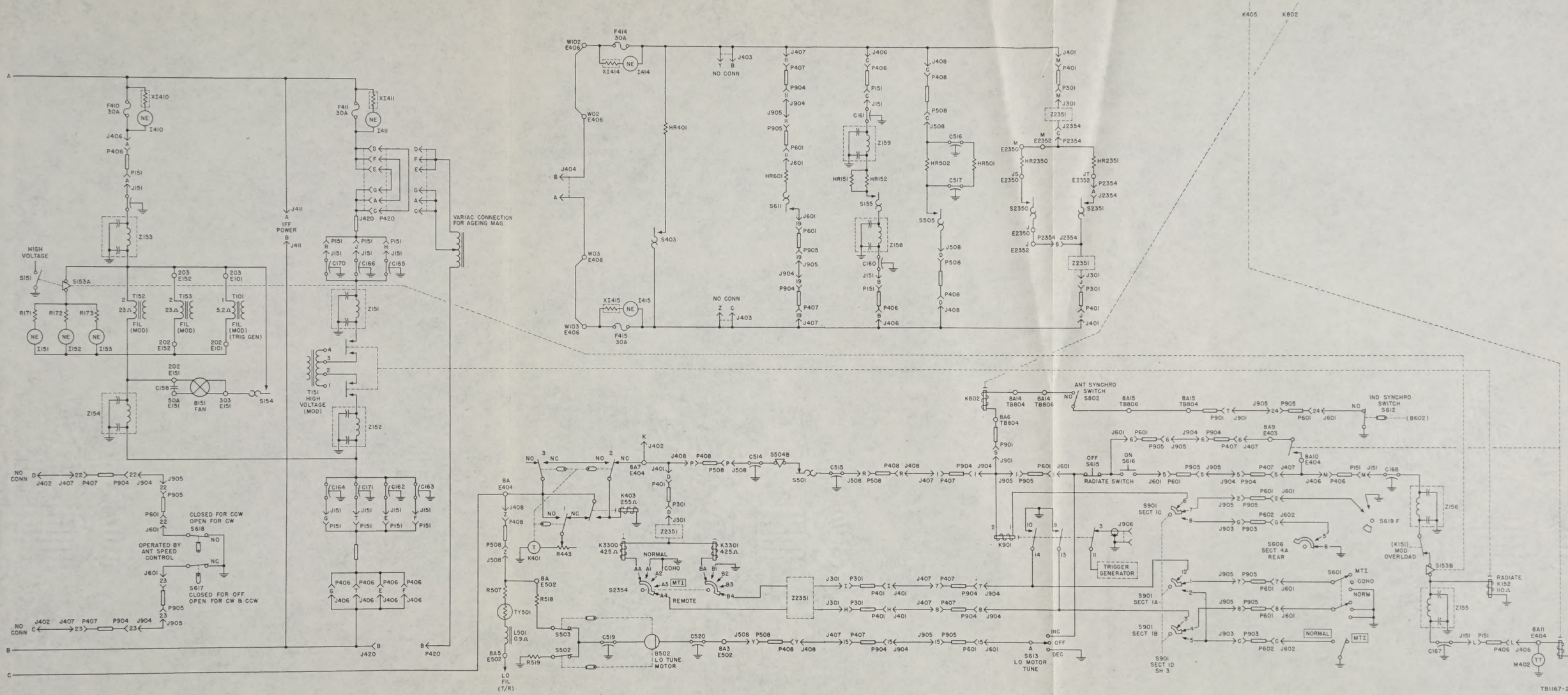

Figure 53.—continued.

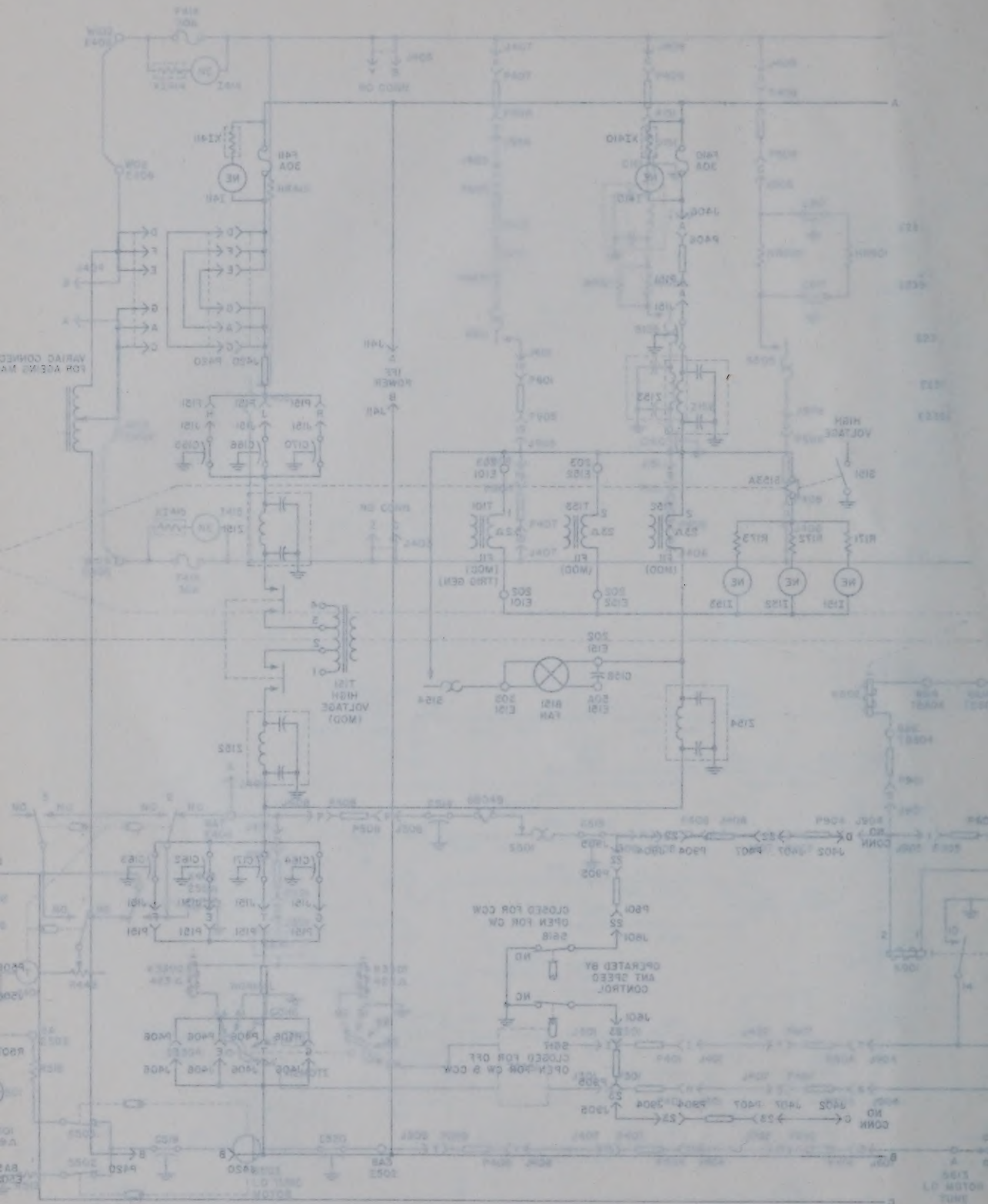

Figure 53.—continued.

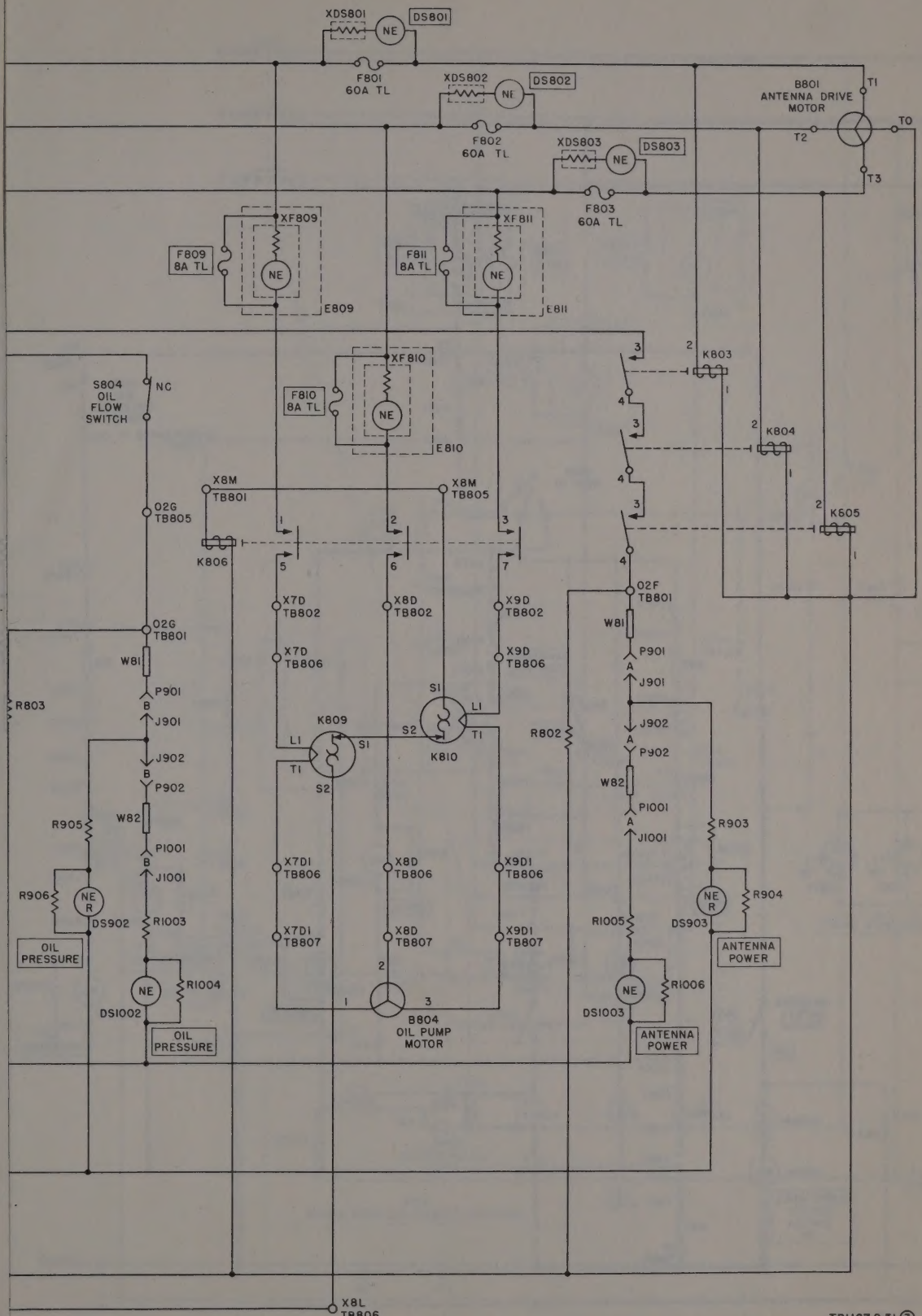
XDS801
NE
DS801
F801
60A TL
XDS802
NE
DS802
F802
60A TL
XDS803
NE
DS803
F803
60A TL
B801
ANTENNA DRIVE
MOTOR
T1
T2
T0
T3
XF809
F809
8A TL
NE
E809
XF811
F811
8A TL
NE
E811
XF810
F810
8A TL
NE
E810
S804
OIL
FLOW
SWITCH
NC
K803
K804
K805
X8M
TB801
X8M
TB805
02G
TB805
K806
X7D
TB802
X8D
TB802
X9D
TB802
X7D
TB806
X9D
TB806
02G
TB801
02F
TB801
W81
P901
J901
J902
P902
W82
P1001
J1001
R803
R905
R906
NE
R
DS902
R1003
R1004
DS1002
OIL
PRESSURE
OIL
PRESSURE
K809
K810
S1
S2
L1
T1
X7D1
TB806
X8D
TB806
X9D1
TB806
X7D1
TB807
X8D
TB807
X9D1
TB807
B804
OIL PUMP
MOTOR
R802
R903
R904
R1005
R1006
DS903
DS1003
ANTENNA
POWER
ANTENNA
POWER
X8L
TB806

TB1167 2-51 ③

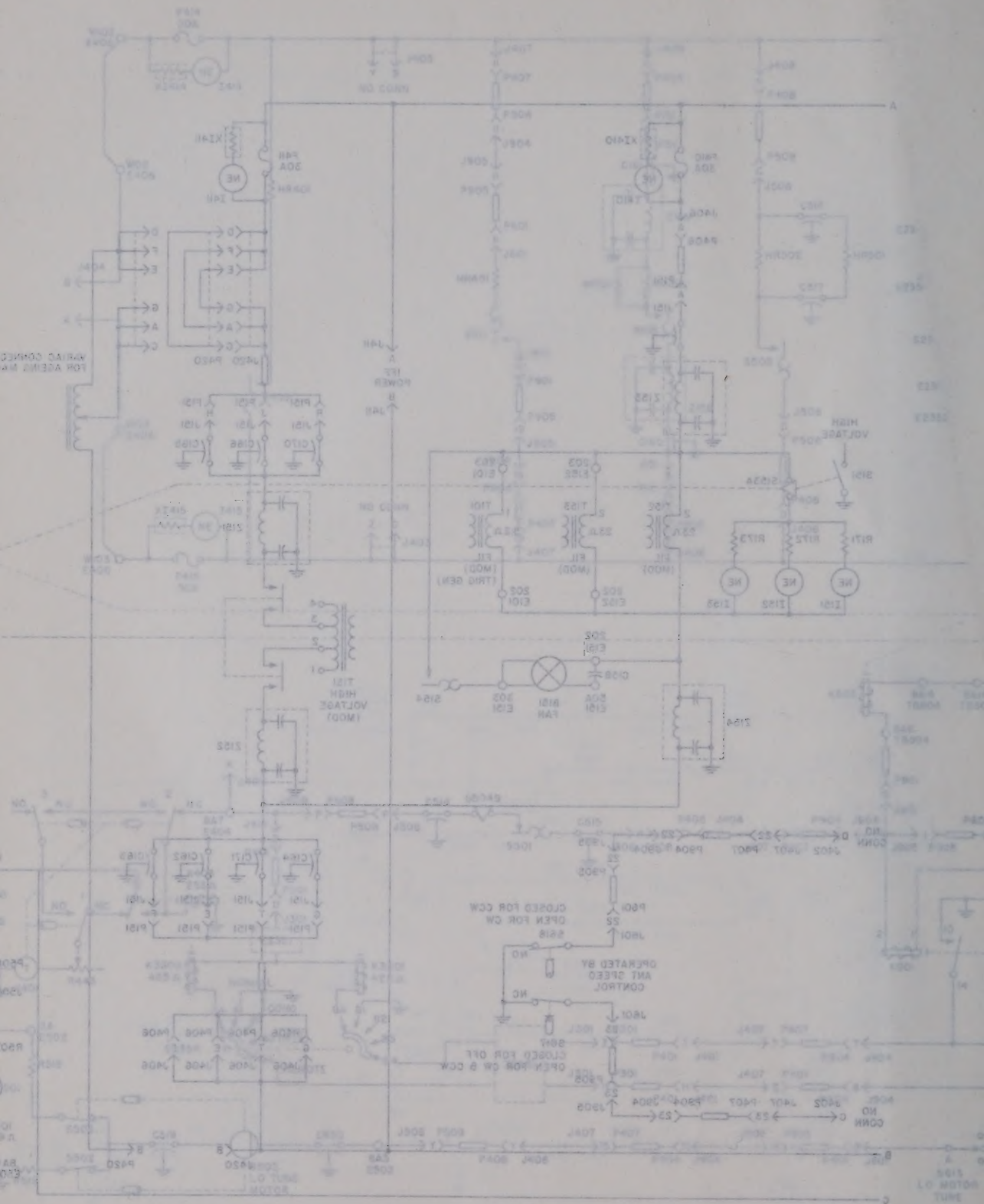

Figure 88—continued

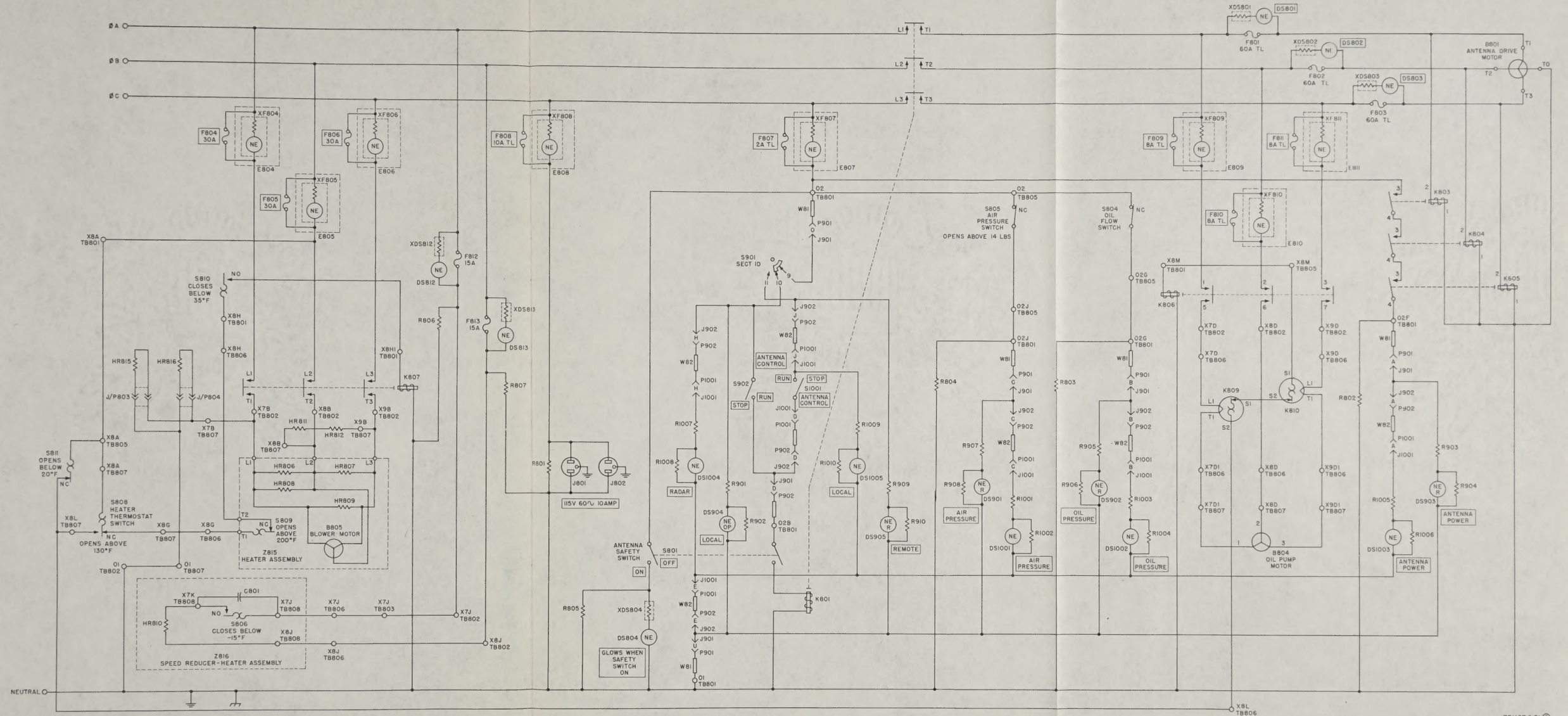

③
Figure 53.—continued.

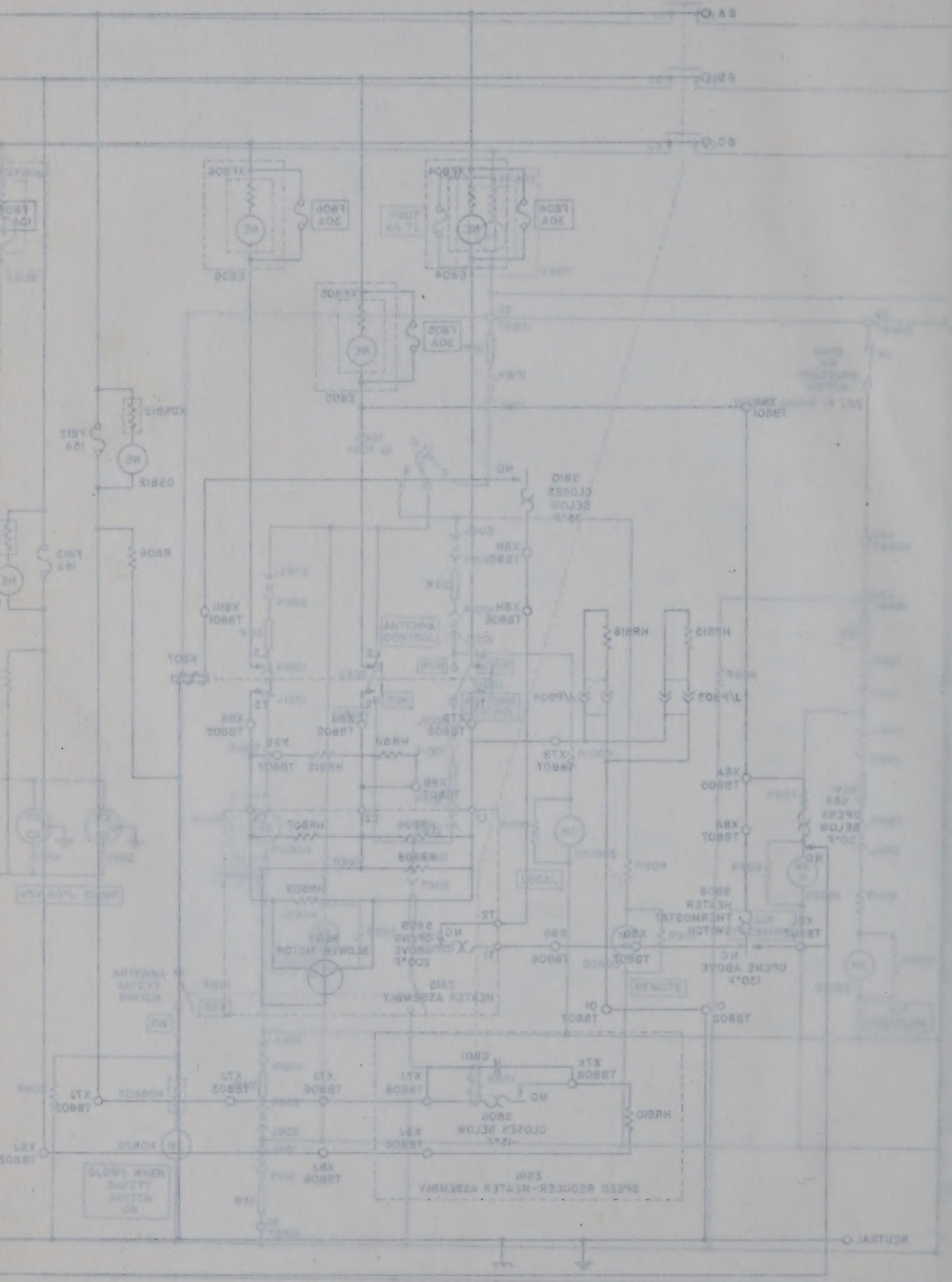

Figure 5A.—continued.

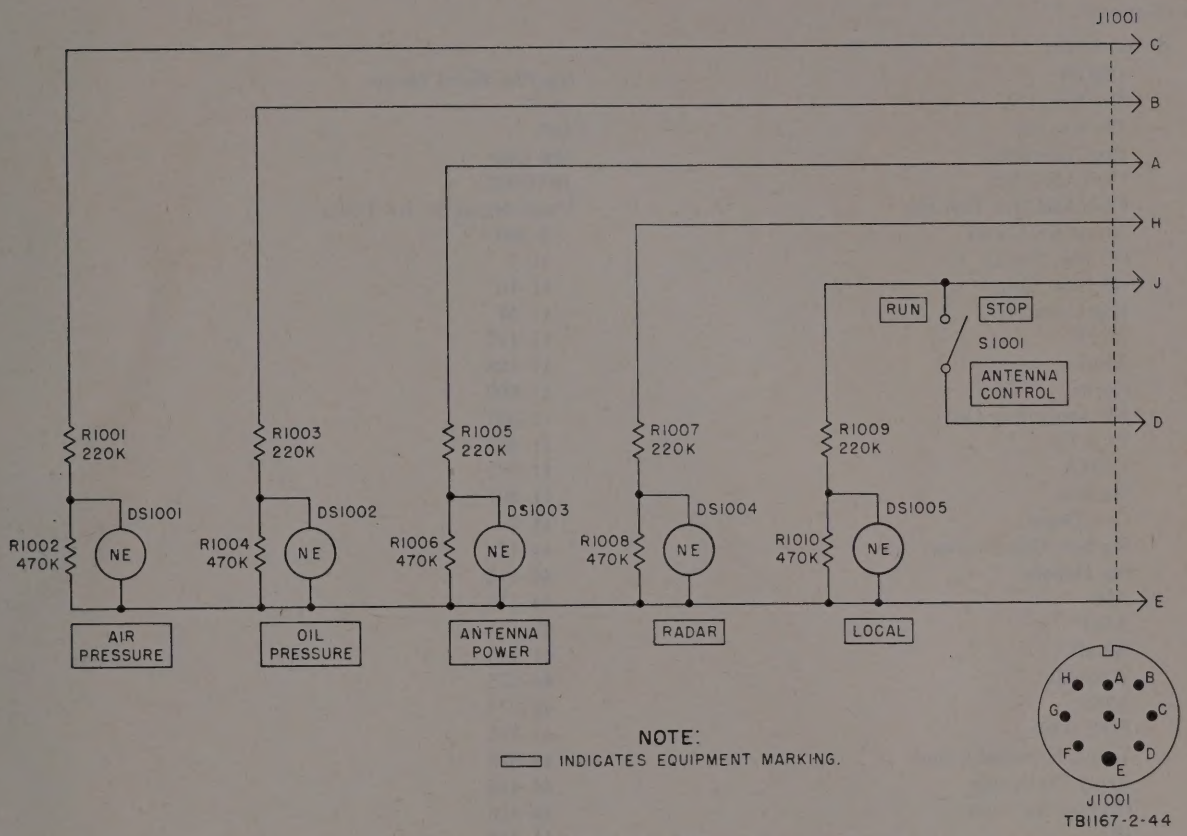

Figure. 48. Antenna Control C–1894/FPS, schematic diagram.

By Order of *Wilber M. Brucker*, Secretary of the Army:

MAXWELL D. TAYLOR,
General, United States Army,
Chief of Staff.

Official:

HERBERT M. JONES,
Major General, United States Army,
The Adjutant General.

Distribution:

Active Army:

CNGB	Sig Fld Maint Shops
Tec Svc, DA	ACS
Tec Svc Bd	Lab
Hq CONARC	Mil Dist
CONARC Bd	JBUSMC
CONARC Bd Test Sec	Units org under fol TOE:
Army AA Comd	6–200
OS Maj Comd	11–7
OS Base Comd	11–16
Log Comd	11–57
MDW	11–127
Armies	11–128
Corps	11–500
US Army Tng Cen	11–557
Ft & Cp	11–587
USMA	11–592
Sig Sch	11–597
Gen Depot	44–7
Sig Sec, Gen Depots	44–17
Sig Depots	44–115
AH	44–116
AFIP	44–145
BAMC	44–146
WRAMC	44–275
AMS	44–276
POE (OS)	44–315
Trans Terminal Comd	44–316
Army Terminals	44–415
OS Sup Agencies	44–416
PG	44–445
Arsenals	44–446
Plants & Works	57

NG: State AG; units—same as Active Army.

USAR: None.

For explanation of abbreviations used, see SR 320–50–1.

☆ U. S. GOVERNMENT PRINTING OFFICE: 1957—423108

SUPERSEDED
BY
DATE